Peter Wong
Managing Director & Shareholder
Hangzhou DM Group
Hangzhou DM power transmission Co.,LTD
Hangzhou DM Compressor Co.,LTD
peter@dumax-group.com
http://dumax-group.com/

Sam Chan
Sales Director & Shareholder
Hangzhou DM Group
Hangzhou DM power transmission Co.,LTD
Hangzhou DM Compressor Co.,LTD
sam@dumax-group.com
http://dumax-group.com/

# Reciprocating Compressor

Copyright © 2021 Hangzhou Dumax (DM) Group All Rights Reserved

# 目录 CONTENTS

| | |
|---|---|
| 01 | 型号说明 Model Designation |
| 02 | 应用范围 Envelope |
| 04 | 性能参数 Performances<br>R134a<br>R22<br>R404A/R507A |
| 13 | 技术数据 Technical data |
| 15 | 压缩机展示图 Compressor exhibition |

# MODEL DESIGNATION
## 型号说明

Semi-hermetic Reciprocating Compressor

半封闭活塞式制冷压缩机

3-50 HP , 18-150 $m^3/h$

| COMPRESSOR / 压缩机 | RFC | 4 | D | - | 5 | .2 |
|---|---|---|---|---|---|---|

| NUMBER OF CYLINDERS / 缸数 | |
|---|---|
| 4 | 4 Cylinders/ 4缸机 |
| 6 | 6 Cylinders/ 6缸机 |

| TYPE / 类型 | |
|---|---|
| G | High temp / 高温机 |
| D | Low temp / 低温机 |
| DS | Double Stage / 双级机 |

| NOMINAL MOTOR POWER / 电机名义功率 | |
|---|---|
| 5 | Hp / 马力 |

| VERSION / 版本 | |
|---|---|
| 2 | 2 / 第2版 |



# APPLICATION LIMITS
## Suction gas temperature 20℃

应用范围

基于吸气温度20℃

**R404A•R507A**

**RFC4D-3.2—RFC4G-9.2**

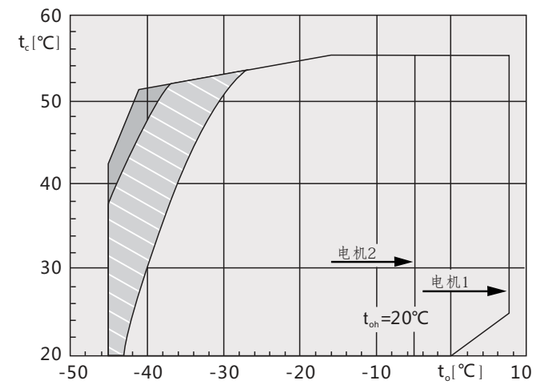


**R404A•R507A**

**RFC4D-8.2—RFC6G-50.2**

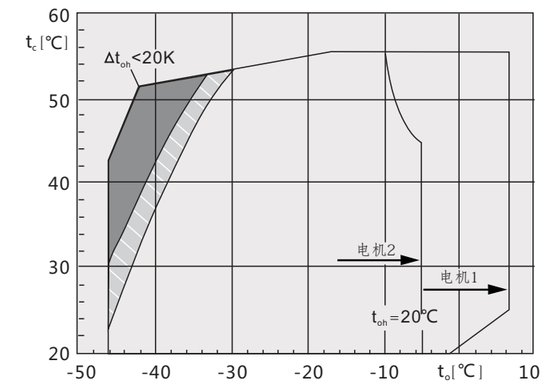


**R134a**

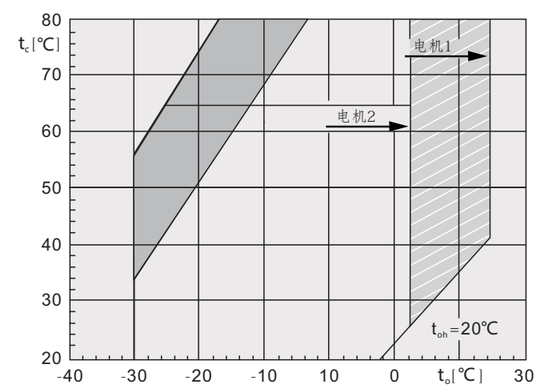


**R407C**

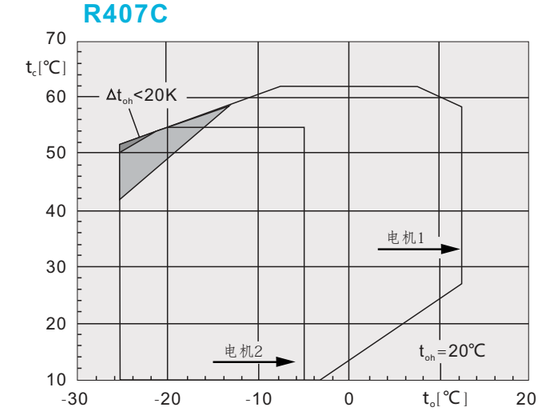


| | | | |
|---|---|---|---|
| $t_o$ | Evaporating temperature(°C) | $t_o$ | 蒸发温度(°C) |
| $t_{oh}$ | Suction gas temperature(°C) | $t_{oh}$ | 吸气温度(°C) |
| $\Delta t_{oh}$ | Suction superheat(K) | $\Delta t_{oh}$ | 吸气过热度(K) |
| $t_c$ | Condensing temperature(°C) | $t_c$ | 冷凝温度(°C) |

| | |
|---|---|
| Additional cooling or max. 0℃ suction gas temperature | 附加冷却或最高0℃吸气温度 |
| Additional cooling | 附加冷却 |
| Additional cooling&limited suction gas temperature | 附加冷却+限制最高吸气温度 |
| Suction superheat>10K | 吸气过热度>10K |

# APPLICATION LIMITS

## Suction gas temperature 20℃

## 应用范围

## 基于吸气温度20℃

### R22

**RFC4D-3.2—RFC4D-5.2**

**空气冷却-直接吸气冷却**

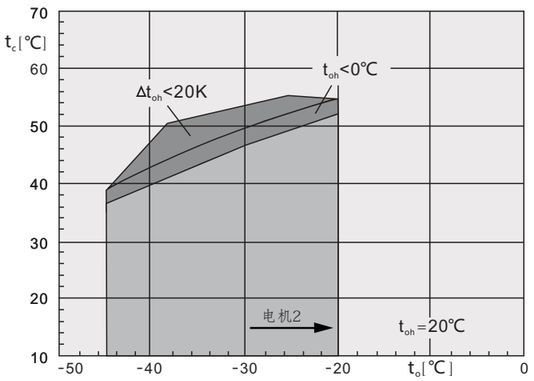


### R22

**RFC4D-3.2—RFC4G-9.2**

**吸气冷却**

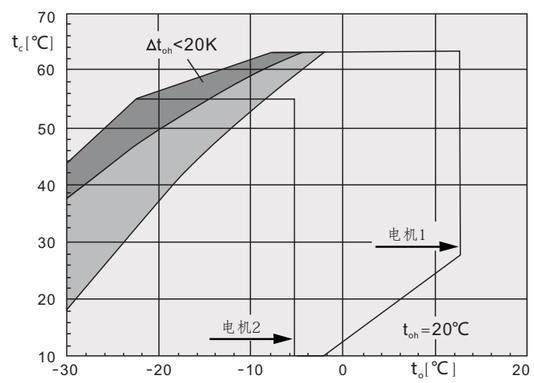


### R22

**RFC4D-8.2—RFC6D-40.2**

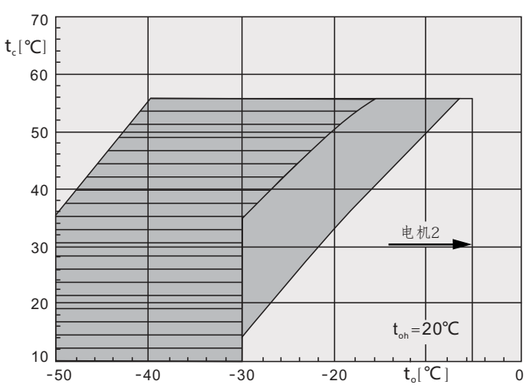


### R22

**RFC4D-8.2—RFC6G-50.2**

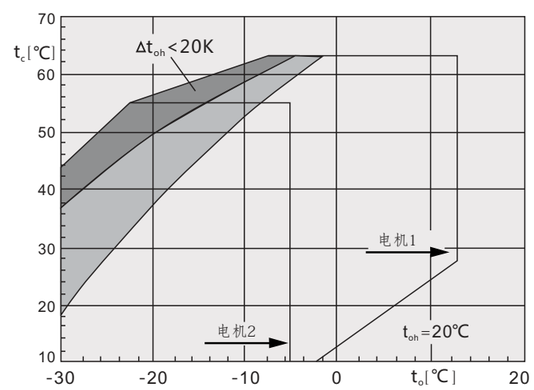


| | | | |
|---|---|---|---|
| $t_o$ | Evaporating temperature(°C) | $t_o$ | 蒸发温度(°C) |
| $t_{oh}$ | Suction gas temperature(°C) | $t_{oh}$ | 吸气温度(°C) |
| $\Delta t_{oh}$ | Suction superheat(K) | $\Delta t_{oh}$ | 吸气过热度(K) |
| $t_c$ | Condensing temperature(°C) | $t_c$ | 冷凝温度(°C) |
| | Additional cooling | | 附加冷却 |
| | Additional cooling&limited suction gas temperature | | 附加冷却+限制最高吸气温度 |
| | Additional cooling&liquid injection cooling system | | 附加冷却+喷液冷却系统 |





# PERFORMANCES

## 性能参数 R134a

| 型号 Model | 冷凝温度 Condensing Temperature ℃ | 制冷量 Refrigerating Capacity Qo(W) 功率消耗 Power Consumption Pe(kW) | | | | | | | | | | | | | | | | |
|---|---|---|---|---|---|---|---|---|---|---|---|---|---|---|---|---|---|---|
| | | 蒸发温度 Evaporating Temperature(℃) | | | | | | | | | | | | | | | | |
| | | ↓ | 12.5 | 10 | 7.5 | 5 | 0 | −5 | −10 | −15 | −20 | −25 | −30 | −35 | −40 | −45 | −50 |
| RFC4D−3.2 | 30 | Qo | 15960 | 14520 | 13190 | 11960 | 9760 | 7870 | 6260 | 4900 | 3740 | 2780 | 1970 | | | | |
| | | Pe | 2.23 | 2.21 | 2.19 | 2.15 | 2.07 | 1.95 | 1.81 | 1.65 | 1.47 | 1.26 | 1.04 | | | | |
| | 40 | Qo | 14070 | 12790 | 11610 | 10510 | 8540 | 6860 | 5420 | 4190 | 3160 | 2290 | 1570 | | | | |
| | | Pe | 2.64 | 2.60 | 2.55 | 2.49 | 2.36 | 2.20 | 2.02 | 1.81 | 1.58 | 1.33 | 1.05 | | | | |
| | 50 | Qo | 12250 | 11130 | 10090 | 9120 | 7390 | 5900 | 4630 | 3540 | 2630 | 1860 | 1220 | | | | |
| | | Pe | 3.04 | 2.96 | 2.88 | 2.80 | 2.61 | 2.41 | 2.19 | 1.94 | 1.66 | 1.36 | 1.02 | | | | |
| RFC4G−5.2 | 50 | Qo | 12200 | 11090 | 10060 | 9090 | 7370 | 5890 | 4620 | 3540 | 2630 | | | | | | |
| | | Pe | 3.19 | 3.11 | 3.02 | 2.93 | 2.72 | 2.49 | 2.24 | 1.97 | 1.67 | | | | | | |
| | 60 | Qo | 10490 | 9530 | 8630 | 7800 | 6300 | 5010 | 3900 | 2960 | 2160 | | | | | | |
| | | Pe | 3.59 | 3.49 | 3.37 | 3.25 | 3.00 | 2.72 | 2.42 | 2.09 | 1.74 | | | | | | |
| | 70 | Qo | 8800 | 7990 | 7230 | 6530 | 5260 | 4160 | 3210 | 2410 | 1720 | | | | | | |
| | | Pe | 3.99 | 3.85 | 3.71 | 3.57 | 3.27 | 2.94 | 2.58 | 2.20 | 1.79 | | | | | | |
| RFC4D−4.2 | 30 | Qo | 20700 | 18850 | 17120 | 15510 | 12660 | 10220 | 8160 | 6410 | 4960 | 3750 | 2760 | | | | |
| | | Pe | 2.80 | 2.84 | 2.86 | 2.86 | 2.82 | 2.72 | 2.57 | 2.38 | 2.16 | 1.91 | 1.64 | | | | |
| | 40 | Qo | 18210 | 16550 | 15020 | 13600 | 11060 | 8900 | 7050 | 5490 | 4190 | 3100 | 2200 | | | | |
| | | Pe | 3.48 | 3.47 | 3.44 | 3.39 | 3.25 | 3.06 | 2.83 | 2.55 | 2.25 | 1.92 | 1.58 | | | | |
| | 50 | Qo | 15740 | 14300 | 12960 | 11720 | 9500 | 7600 | 5970 | 4590 | 3420 | 2450 | 1640 | | | | |
| | | Pe | 4.13 | 4.06 | 3.98 | 3.88 | 3.64 | 3.36 | 3.03 | 2.67 | 2.27 | 1.86 | 1.42 | | | | |
| RFC4G−6.2 | 50 | Qo | 15710 | 14270 | 12940 | 11710 | 9490 | 7600 | 5970 | 4590 | 3430 | | | | | | |
| | | Pe | 4.16 | 4.09 | 4.00 | 3.89 | 3.65 | 3.35 | 3.02 | 2.65 | 2.24 | | | | | | |
| | 60 | Qo | 13350 | 12120 | 10970 | 9900 | 7990 | 6340 | 4920 | 3710 | 2690 | | | | | | |
| | | Pe | 4.81 | 4.68 | 4.53 | 4.37 | 4.01 | 3.61 | 3.17 | 2.70 | 2.21 | | | | | | |
| | 70 | Qo | 11030 | 10000 | 9030 | 8140 | 6520 | 5110 | 3910 | 2870 | 1990 | | | | | | |
| | | Pe | 5.44 | 5.24 | 5.03 | 4.81 | 4.34 | 3.83 | 3.28 | 2.71 | 2.11 | | | | | | |
| RFC4D−5.2 | 30 | Qo | 24600 | 22450 | 20400 | 18510 | 15140 | 12250 | 9790 | 7700 | 5930 | 4440 | 3210 | | | | |
| | | Pe | 3.61 | 3.55 | 3.49 | 3.42 | 3.26 | 3.08 | 2.86 | 2.62 | 2.35 | 2.05 | 1.72 | | | | |
| | 40 | Qo | 21700 | 19750 | 17940 | 16270 | 13260 | 10690 | 8480 | 6610 | 5030 | 3700 | 2600 | | | | |
| | | Pe | 4.30 | 4.21 | 4.12 | 4.02 | 3.79 | 3.53 | 3.23 | 2.91 | 2.56 | 2.17 | 1.75 | | | | |
| | 50 | Qo | 18880 | 17170 | 15580 | 14110 | 11460 | 9190 | 7240 | 5590 | 4190 | 3020 | 2050 | | | | |
| | | Pe | 4.96 | 4.84 | 4.71 | 4.57 | 4.27 | 3.93 | 3.56 | 3.15 | 2.71 | 2.23 | 1.73 | | | | |
| RFC4G−7.2 | 50 | Qo | 18800 | 17100 | 15520 | 14050 | 11430 | 9170 | 7230 | 5580 | 4190 | | | | | | |
| | | Pe | 4.99 | 4.86 | 4.73 | 4.58 | 4.27 | 3.92 | 3.54 | 3.13 | 2.69 | | | | | | |
| | 60 | Qo | 16160 | 14680 | 13310 | 12030 | 9750 | 7770 | 6090 | 4650 | 3440 | | | | | | |
| | | Pe | 5.62 | 5.46 | 5.28 | 5.10 | 4.70 | 4.28 | 3.82 | 3.33 | 2.80 | | | | | | |
| | 70 | Qo | 13580 | 12330 | 11170 | 10080 | 8140 | 6460 | 5020 | 3800 | 2770 | | | | | | |
| | | Pe | 6.27 | 6.06 | 5.84 | 5.61 | 5.13 | 4.63 | 4.09 | 3.51 | 2.90 | | | | | | |
| RFC4D−6.2 | 30 | Qo | 29550 | 26900 | 24450 | 22200 | 18170 | 14720 | 11770 | 9270 | 7170 | 5410 | 3950 | | | | |
| | | Pe | 4.35 | 4.28 | 4.20 | 4.10 | 3.89 | 3.64 | 3.35 | 3.04 | 2.70 | 2.33 | 1.95 | | | | |
| | 40 | Qo | 26000 | 23650 | 21500 | 19490 | 15910 | 12830 | 10210 | 7980 | 6100 | 4520 | 3210 | | | | |
| | | Pe | 5.25 | 5.13 | 5.00 | 4.85 | 4.54 | 4.18 | 3.80 | 3.38 | 2.94 | 2.48 | 2.00 | | | | |
| | 50 | Qo | 22550 | 20500 | 18630 | 16880 | 13740 | 11040 | 8730 | 6760 | 5100 | 3700 | 2540 | | | | |
| | | Pe | 6.08 | 5.90 | 5.72 | 5.53 | 5.11 | 4.66 | 4.17 | 3.66 | 3.13 | 2.57 | 1.99 | | | | |
| RFC4G−9.2 | 50 | Qo | 22550 | 20550 | 18640 | 16890 | 13750 | 11040 | 8730 | 6770 | 5100 | | | | | | |
| | | Pe | 6.07 | 5.90 | 5.72 | 5.53 | 5.12 | 4.66 | 4.18 | 3.66 | 3.12 | | | | | | |
| | 60 | Qo | 19250 | 17500 | 15870 | 14360 | 11650 | 9320 | 7320 | 5620 | 4180 | | | | | | |
| | | Pe | 6.86 | 6.63 | 6.39 | 6.14 | 5.62 | 5.07 | 4.49 | 3.89 | 3.25 | | | | | | |
| | 70 | Qo | 15970 | 14520 | 13160 | 11900 | 9620 | 7660 | 5980 | 4560 | 3350 | | | | | | |
| | | Pe | 7.57 | 7.29 | 6.99 | 6.69 | 6.07 | 5.43 | 4.76 | 4.06 | 3.34 | | | | | | |

参数基于吸气温度20℃，50Hz，液体无过冷。Suction gas temperature 20℃, 50Hz, without liquid subcooling.

附加冷却或限制吸气温度。Additional cooling or limited suction gas temperature.

# PERFORMANCES

## 性能参数 R134a

| 型号 Model | 冷凝温度 Condensing Temperature ℃ | 制冷量 Refrigerating Capacity Qo(W) 功率消耗 Power Consumption Pe(kW) | 蒸发温度 Evaporating Temperature(℃) | | | | | | | | | | | | | | |
|---|---|---|---|---|---|---|---|---|---|---|---|---|---|---|---|---|---|
| | | ↓ | 12.5 | 10 | 7.5 | 5 | 0 | −5 | −10 | −15 | −20 | −25 | −30 | −35 | −40 | −45 | −50 |
| RFC4D−8.2 | 30 | Qo | 38400 | 35000 | 31800 | 28900 | 23600 | 19120 | 15280 | 12030 | 9280 | 6980 | 5080 | | | | |
| | | Pe | 5.05 | 5.12 | 5.16 | 5.16 | 5.05 | 4.83 | 4.53 | 4.15 | 3.73 | 3.28 | 2.84 | | | | |
| | 40 | Qo | 33950 | 30900 | 28050 | 25400 | 20700 | 16670 | 13220 | 10290 | 7810 | 5730 | 3990 | | | | |
| | | Pe | 6.63 | 6.52 | 6.39 | 6.24 | 5.87 | 5.43 | 4.93 | 4.40 | 3.83 | 3.26 | 2.69 | | | | |
| | 50 | Qo | 29350 | 26700 | 24200 | 21900 | 17730 | 14170 | 11110 | 8520 | 6320 | 4470 | 2930 | | | | |
| | | Pe | 7.88 | 7.64 | 7.38 | 7.10 | 6.52 | 5.89 | 5.23 | 4.54 | 3.84 | 3.14 | 2.44 | | | | |
| RFC4G−12.2 | 50 | Qo | 29100 | 26400 | 23900 | 21550 | 17390 | 13810 | 10750 | 8140 | 5940 | | | | | | |
| | | Pe | 7.51 | 7.33 | 7.12 | 6.88 | 6.34 | 5.73 | 5.06 | 4.37 | 3.66 | | | | | | |
| | 60 | Qo | 24450 | 22150 | 19990 | 18000 | 14420 | 11340 | 8710 | 6460 | 4560 | | | | | | |
| | | Pe | 8.49 | 8.18 | 7.86 | 7.51 | 6.79 | 6.02 | 5.21 | 4.40 | 3.58 | | | | | | |
| | 70 | Qo | 19850 | 17950 | 16170 | 14520 | 11540 | 8970 | 6760 | 4880 | 3290 | | | | | | |
| | | Pe | 9.15 | 8.75 | 8.33 | 7.91 | 7.04 | 6.14 | 5.24 | 4.33 | 3.43 | | | | | | |
| RFC4D−10.2 | 30 | Qo | 44850 | 40850 | 37150 | 33700 | 27550 | 22300 | 17790 | 13960 | 10730 | 8020 | 5760 | | | | |
| | | Pe | 5.88 | 6.01 | 6.08 | 6.10 | 5.99 | 5.73 | 5.33 | 4.84 | 4.30 | 3.73 | 3.17 | | | | |
| | 40 | Qo | 39600 | 36000 | 32700 | 29650 | 24150 | 19410 | 15360 | 11920 | 9000 | 6540 | 4480 | | | | |
| | | Pe | 7.63 | 7.56 | 7.45 | 7.29 | 6.89 | 6.38 | 5.77 | 5.11 | 4.41 | 3.70 | 3.01 | | | | |
| | 50 | Qo | 34200 | 31100 | 28200 | 25450 | 20600 | 16450 | 12870 | 9820 | 7230 | 5050 | 3220 | | | | |
| | | Pe | 9.11 | 8.85 | 8.56 | 8.26 | 7.58 | 6.84 | 6.05 | 5.24 | 4.40 | 3.58 | 2.77 | | | | |
| RFC4G−15.2 | 50 | Qo | 34700 | 31450 | 28450 | 25650 | 20650 | 16350 | 12680 | 9560 | 6930 | | | | | | |
| | | Pe | 8.78 | 8.54 | 8.28 | 8.00 | 7.36 | 6.65 | 5.88 | 5.07 | 4.24 | | | | | | |
| | 60 | Qo | 29250 | 26500 | 23900 | 21500 | 17170 | 13450 | 10270 | 7550 | 5260 | | | | | | |
| | | Pe | 9.80 | 9.44 | 9.06 | 8.67 | 7.83 | 6.94 | 6.01 | 5.05 | 4.07 | | | | | | |
| | 70 | Qo | 23850 | 21550 | 19380 | 17380 | 13770 | 10650 | 7960 | 5670 | 3720 | | | | | | |
| | | Pe | 10.58 | 10.12 | 9.64 | 9.15 | 8.14 | 7.09 | 6.00 | 4.89 | 3.76 | | | | | | |
| RFC4D−12.2 | 30 | Qo | 50900 | 46300 | 42100 | 38250 | 31300 | 25350 | 20250 | 15930 | 12290 | 9240 | 6700 | | | | |
| | | Pe | 7.45 | 7.40 | 7.33 | 7.22 | 6.93 | 6.55 | 6.10 | 5.58 | 5.01 | 4.41 | 3.79 | | | | |
| | 40 | Qo | 45300 | 41200 | 37450 | 33950 | 27700 | 22300 | 17680 | 13760 | 10440 | 7650 | 5320 | | | | |
| | | Pe | 9.16 | 8.97 | 8.75 | 8.50 | 7.95 | 7.33 | 6.65 | 5.92 | 5.17 | 4.39 | 3.61 | | | | |
| | 50 | Qo | 39550 | 35950 | 32600 | 29500 | 23900 | 19090 | 14980 | 11480 | 8510 | 6020 | 3930 | | | | |
| | | Pe | 10.79 | 10.45 | 10.09 | 9.71 | 8.88 | 7.99 | 7.05 | 6.10 | 5.15 | 4.22 | 3.34 | | | | |
| RFC4G−20.2 | 50 | Qo | 40250 | 36500 | 33000 | 29800 | 23950 | 18970 | 14690 | 11040 | 7940 | | | | | | |
| | | Pe | 10.42 | 10.11 | 9.77 | 9.41 | 8.63 | 7.77 | 6.85 | 5.88 | 4.89 | | | | | | |
| | 60 | Qo | 33900 | 30650 | 27650 | 24850 | 19850 | 15530 | 11830 | 8690 | 6020 | | | | | | |
| | | Pe | 11.65 | 11.20 | 10.72 | 10.22 | 9.18 | 8.10 | 6.98 | 5.84 | 4.70 | | | | | | |
| | 70 | Qo | 27500 | 24850 | 22350 | 20000 | 15840 | 12240 | 9150 | 6520 | 4300 | | | | | | |
| | | Pe | 12.59 | 12.01 | 11.42 | 10.82 | 9.57 | 8.30 | 7.02 | 5.75 | 4.52 | | | | | | |
| RFC4D−15.2 | 30 | Qo | 69100 | 62800 | 57000 | 51600 | 49150 | 33700 | 26700 | 20850 | 15920 | 11840 | 8500 | | | | |
| | | Pe | 10.40 | 10.07 | 9.74 | 9.41 | 8.74 | 8.07 | 7.38 | 6.67 | 5.95 | 5.20 | 4.42 | | | | |
| | 40 | Qo | 61300 | 55700 | 50400 | 45600 | 37000 | 29600 | 23350 | 18100 | 13700 | 10060 | 7080 | | | | |
| | | Pe | 12.46 | 11.93 | 11.43 | 10.93 | 9.97 | 9.04 | 8.13 | 7.23 | 6.32 | 5.39 | 4.44 | | | | |
| | 50 | Qo | 54100 | 49050 | 44400 | 40100 | 32400 | 25800 | 20250 | 15570 | 11660 | 8430 | 5800 | | | | |
| | | Pe | 14.24 | 13.54 | 12.87 | 12.22 | 10.99 | 9.81 | 8.69 | 7.59 | 6.51 | 5.43 | 4.34 | | | | |
| RFC4G−25.2 | 50 | Qo | 54100 | 49050 | 44400 | 40100 | 32400 | 25800 | 20250 | 15570 | 11660 | | | | | | |
| | | Pe | 13.77 | 13.13 | 12.52 | 11.92 | 10.78 | 9.68 | 8.62 | 7.58 | 6.55 | | | | | | |
| | 60 | Qo | 47100 | 42700 | 38600 | 34800 | 28000 | 22200 | 17320 | 13190 | 9760 | | | | | | |
| | | Pe | 15.04 | 14.27 | 13.53 | 12.81 | 11.44 | 10.13 | 8.89 | 7.69 | 6.53 | | | | | | |
| | 70 | Qo | 40250 | 36450 | 32900 | 29600 | 23750 | 18740 | 14500 | 10940 | 7980 | | | | | | |
| | | Pe | 16.09 | 15.21 | 14.36 | 13.53 | 11.96 | 10.48 | 9.07 | 7.74 | 6.45 | | | | | | |

参数基于吸气温度20℃，50Hz，液体无过冷。Suction gas temperature 20℃, 50Hz, without liquid subcooling.
附加冷却或限制吸气温度。Additional cooling or limited suction gas temperature.



半封闭活塞式制冷压缩机
SEMI-HERMETIC RECIPROCATING COMPRESSOR

PERFORMANCES

性能参数 R134a

| 型号 Model | 冷凝温度 Condensing Temperature ℃ | 制冷量 Refrigerating Capacity Qo(W) 功率消耗 Power Consumption Pe(kW) | 蒸发温度 Evaporating Temperature(℃) | | | | | | | | | | | | | | |
|---|---|---|---|---|---|---|---|---|---|---|---|---|---|---|---|---|---|
| | | ↓ | 12.5 | 10 | 7.5 | 5 | 0 | −5 | −10 | −15 | −20 | −25 | −30 | −35 | −40 | −45 | −50 |
| RFC4D−20.2 | 30 | Qo | 78500 | 71400 | 64800 | 58600 | 47700 | 38350 | 30450 | 23800 | 18190 | 13560 | 9770 | | | | |
| | | Pe | 12.45 | 12.15 | 11.83 | 11.50 | 10.78 | 10.00 | 9.16 | 8.26 | 7.31 | 6.32 | 5.28 | | | | |
| | 40 | Qo | 69700 | 63300 | 57400 | 51900 | 42100 | 33750 | 26650 | 20700 | 15700 | 11570 | 8190 | | | | |
| | | Pe | 14.65 | 14.14 | 13.62 | 13.09 | 12.03 | 10.95 | 9.85 | 8.73 | 7.59 | 6.44 | 5.28 | | | | |
| | 50 | Qo | 61500 | 55800 | 50500 | 45650 | 36950 | 29500 | 23200 | 17870 | 13430 | 9760 | 6770 | | | | |
| | | Pe | 16.67 | 15.93 | 15.20 | 14.48 | 13.06 | 11.67 | 10.31 | 8.97 | 7.66 | 6.37 | 5.10 | | | | |
| RFC4G−30.2 | 50 | Qo | 61500 | 55800 | 50500 | 45650 | 36950 | 29500 | 23200 | 17870 | 13430 | | | | | | |
| | | Pe | 16.09 | 15.42 | 14.76 | 14.10 | 12.79 | 11.50 | 10.22 | 8.94 | 7.67 | | | | | | |
| | 60 | Qo | 53700 | 48650 | 44000 | 39700 | 32000 | 25450 | 19890 | 15210 | 11300 | | | | | | |
| | | Pe | 17.65 | 16.80 | 15.96 | 15.14 | 13.54 | 11.99 | 10.49 | 9.03 | 7.60 | | | | | | |
| | 70 | Qo | 45900 | 41600 | 37600 | 33850 | 27200 | 21550 | 16720 | 12680 | 9320 | | | | | | |
| | | Pe | 19.22 | 18.16 | 17.14 | 16.15 | 14.25 | 12.46 | 10.75 | 9.12 | 7.55 | | | | | | |
| RFC6D−25.2 | 30 | Qo | 103800 | 94300 | 85600 | 77400 | 63000 | 50600 | 40100 | 31300 | 23900 | 17780 | 12760 | | | | |
| | | Pe | 15.62 | 15.12 | 14.62 | 14.12 | 13.12 | 12.11 | 11.08 | 10.02 | 8.93 | 7.81 | 6.64 | | | | |
| | 40 | Qo | 92000 | 83600 | 75700 | 68500 | 55500 | 44450 | 35100 | 27150 | 20550 | 15100 | 10630 | | | | |
| | | Pe | 18.70 | 17.92 | 17.15 | 16.41 | 14.97 | 13.57 | 12.20 | 10.85 | 9.49 | 8.10 | 6.66 | | | | |
| | 50 | Qo | 81100 | 73600 | 66600 | 60200 | 48600 | 38800 | 30400 | 23400 | 17510 | 12660 | 8710 | | | | |
| | | Pe | 21.40 | 20.30 | 19.33 | 18.35 | 16.49 | 14.73 | 13.04 | 11.40 | 9.78 | 8.16 | 6.51 | | | | |
| RFC6G−35.2 | 50 | Qo | 81100 | 73600 | 66600 | 60200 | 48600 | 38800 | 30400 | 23400 | 17510 | | | | | | |
| | | Pe | 20.70 | 19.72 | 18.80 | 17.90 | 16.18 | 14.53 | 12.94 | 11.38 | 9.84 | | | | | | |
| | 60 | Qo | 70700 | 64100 | 57900 | 52200 | 42050 | 33400 | 26000 | 19810 | 14650 | | | | | | |
| | | Pe | 22.60 | 21.40 | 20.30 | 19.24 | 17.17 | 15.21 | 13.34 | 11.54 | 9.80 | | | | | | |
| | 70 | Qo | 60400 | 54700 | 49400 | 44450 | 35650 | 28150 | 21750 | 16420 | 11980 | | | | | | |
| | | Pe | 24.20 | 22.80 | 21.60 | 20.30 | 17.95 | 15.73 | 13.62 | 11.61 | 9.68 | | | | | | |
| RFC6D−30.2 | 30 | Qo | 117900 | 107100 | 97200 | 88000 | 71600 | 57600 | 45700 | 35650 | 27300 | 20350 | 14660 | | | | |
| | | Pe | 18.68 | 18.23 | 17.76 | 17.26 | 16.18 | 15.01 | 13.74 | 12.40 | 10.97 | 9.48 | 7.93 | | | | |
| | 40 | Qo | 104600 | 95000 | 86100 | 77900 | 63200 | 50700 | 40000 | 31050 | 23550 | 17360 | 12280 | | | | |
| | | Pe | 22.00 | 21.20 | 20.40 | 19.65 | 18.05 | 16.43 | 14.77 | 13.10 | 11.39 | 9.67 | 7.92 | | | | |
| | 50 | Qo | 92300 | 83800 | 75800 | 68500 | 55400 | 44250 | 34800 | 26800 | 20150 | 14650 | 10160 | | | | |
| | | Pe | 25.00 | 23.90 | 22.80 | 21.70 | 19.60 | 17.51 | 15.47 | 13.46 | 11.49 | 9.55 | 7.65 | | | | |
| RFC6G−40.2 | 50 | Qo | 92300 | 83800 | 75800 | 68500 | 55400 | 44250 | 34800 | 26800 | 20150 | | | | | | |
| | | Pe | 24.10 | 23.10 | 22.10 | 21.20 | 19.20 | 17.26 | 15.33 | 13.42 | 11.51 | | | | | | |
| | 60 | Qo | 80500 | 73000 | 66000 | 59600 | 48050 | 38200 | 29850 | 22800 | 16960 | | | | | | |
| | | Pe | 26.50 | 25.20 | 24.00 | 22.70 | 20.30 | 17.99 | 15.74 | 13.55 | 11.41 | | | | | | |
| | 70 | Qo | 68900 | 62400 | 56400 | 50800 | 40850 | 32300 | 25100 | 19020 | 13980 | | | | | | |
| | | Pe | 28.80 | 27.30 | 25.70 | 24.20 | 21.40 | 18.70 | 16.13 | 13.69 | 11.33 | | | | | | |
| RFC6D−40.2 | 30 | Qo | 138400 | 125800 | 114200 | 103400 | 84200 | 67900 | 53900 | 42200 | 32400 | 24250 | 17570 | | | | |
| | | Pe | 22.20 | 21.60 | 21.10 | 20.50 | 19.27 | 17.91 | 16.44 | 14.87 | 13.20 | 11.44 | 9.59 | | | | |
| | 40 | Qo | 122900 | 111700 | 101300 | 91700 | 74500 | 59900 | 47400 | 36900 | 28150 | 20850 | 14900 | | | | |
| | | Pe | 25.80 | 24.90 | 24.00 | 23.10 | 21.20 | 19.33 | 17.39 | 15.42 | 13.42 | 11.41 | 9.38 | | | | |
| | 50 | Qo | 108700 | 98700 | 89500 | 80900 | 65600 | 52500 | 41450 | 32100 | 24250 | 17800 | 12520 | | | | |
| | | Pe | 29.90 | 28.50 | 27.10 | 25.80 | 23.10 | 20.60 | 18.16 | 15.79 | 13.48 | 11.23 | 9.03 | | | | |
| RFC6G−50.2 | 50 | Qo | 108700 | 98700 | 89500 | 80900 | 65600 | 52500 | 41450 | 32100 | 24250 | | | | | | |
| | | Pe | 29.30 | 28.00 | 26.70 | 25.40 | 22.90 | 20.50 | 18.14 | 15.85 | 13.61 | | | | | | |
| | 60 | Qo | 95000 | 86300 | 78100 | 70600 | 57100 | 45550 | 35750 | 27500 | 20650 | | | | | | |
| | | Pe | 32.60 | 30.80 | 29.10 | 27.50 | 24.40 | 21.40 | 18.67 | 16.05 | 13.55 | | | | | | |
| | 70 | Qo | 81500 | 74000 | 66900 | 60400 | 48750 | 38750 | 30300 | 23200 | 17250 | | | | | | |
| | | Pe | 35.20 | 33.10 | 31.20 | 29.30 | 25.80 | 22.50 | 19.39 | 16.49 | 13.72 | | | | | | |

参数基于吸气温度20℃，50Hz，液体无过冷。Suction gas temperature 20℃, 50Hz, without liquid subcooling.
附加冷却或限制吸气温度。Additional cooling or limited suction gas temperature.

# PERFORMANCES

## 性能参数 R22

| 型号 Model | 冷凝温度 Condensing Temperature ℃ | 制冷量 Refrigerating Capacity Qo(W) 功率消耗 Power Consumption Pe(kW) | | | | | | | | | | | | | | | |
|---|---|---|---|---|---|---|---|---|---|---|---|---|---|---|---|---|---|
| | | 蒸发温度 Evaporating Temperature(℃) | | | | | | | | | | | | | | | |
| | | ↓ | 12.5 | 10 | 7.5 | 5 | 0 | -5 | -10 | -15 | -20 | -25 | -30 | -35 | -40 | -45 | -50 |
| RFC4D-3.2 | 30 | Qo | | | | | | 12760 | 10380 | 8310 | 7070 | 5540 | 4260 | 3190 | 2300 | | |
| | | Pe | | | | | | 3.25 | 3.07 | 2.86 | 2.68 | 2.43 | 2.17 | 1.93 | 1.71 | | |
| | 40 | Qo | | | | | | 11220 | 9030 | 7140 | 6010 | 4650 | 3510 | 2560 | 1790 | | |
| | | Pe | | | | | | 3.78 | 3.48 | 3.16 | 2.96 | 2.62 | 2.28 | 1.97 | 1.70 | | |
| | 50 | Qo | | | | | | 9650 | 7670 | 5950 | 4960 | 3770 | 2770 | 1940 | | | |
| | | Pe | | | | | | 4.22 | 3.82 | 3.42 | 3.25 | 2.88 | 2.52 | 2.13 | | | |
| RFC4G-5.2 | 30 | Qo | 24400 | 22350 | 20500 | 18720 | 15540 | 12780 | 10390 | 8320 | 6550 | 5030 | 3740 | | | | |
| | | Pe | 2.84 | 2.97 | 3.06 | 3.13 | 3.17 | 3.12 | 2.99 | 2.80 | 2.57 | 2.32 | 2.07 | | | | |
| | 40 | Qo | 21800 | 19960 | 18250 | 16650 | 13750 | 11230 | 9040 | 7150 | 5530 | 4130 | 2950 | | | | |
| | | Pe | 4.00 | 4.02 | 4.02 | 3.99 | 3.86 | 3.66 | 3.40 | 3.11 | 2.80 | 2.49 | 2.21 | | | | |
| | 50 | Qo | 19180 | 17530 | 15980 | 14530 | 11920 | 9640 | 7660 | 5950 | 4480 | 3220 | | | | | |
| | | Pe | 5.00 | 4.93 | 4.84 | 4.72 | 4.45 | 4.12 | 3.76 | 3.39 | 3.02 | 2.67 | | | | | |
| RFC4D-4.2 | 30 | Qo | | | | | | 15780 | 12860 | 10350 | 8820 | 6930 | 5340 | 4010 | 2910 | | |
| | | Pe | | | | | | 3.97 | 3.78 | 3.54 | 3.31 | 3.07 | 2.76 | 2.41 | 2.09 | | |
| | 40 | Qo | | | | | | 13840 | 11180 | 8880 | 7550 | 5860 | 4440 | 3270 | 2300 | | |
| | | Pe | | | | | | 4.60 | 4.28 | 3.92 | 3.66 | 3.32 | 2.94 | 2.55 | 2.17 | | |
| | 50 | Qo | | | | | | 11860 | 9450 | 7360 | 6160 | 4690 | 3450 | 2420 | | | |
| | | Pe | | | | | | 5.11 | 4.68 | 4.24 | 4.01 | 3.57 | 3.04 | 2.49 | | | |
| RFC4G-6.2 | 30 | Qo | 29950 | 27500 | 25200 | 23050 | 19160 | 15800 | 12880 | 10360 | 8200 | 6350 | 4780 | | | | |
| | | Pe | 3.43 | 3.64 | 3.79 | 3.90 | 3.98 | 3.91 | 3.73 | 3.47 | 3.17 | 2.86 | 2.58 | | | | |
| | 40 | Qo | 26750 | 24500 | 22400 | 20450 | 16930 | 13860 | 11190 | 8890 | 6910 | 5210 | 3770 | | | | |
| | | Pe | 4.97 | 5.03 | 5.03 | 5.00 | 4.83 | 4.56 | 4.22 | 3.84 | 3.46 | 3.12 | 2.84 | | | | |
| | 50 | Qo | 23450 | 21450 | 19570 | 17810 | 14630 | 11850 | 9440 | 7350 | 5560 | 4020 | | | | | |
| | | Pe | 6.31 | 6.22. | 6.09 | 5.94 | 5.56 | 5.12 | 4.65 | 4.19 | 3.77 | 3.43 | | | | | |
| RFC4D-5.2 | 30 | Qo | | | | | | 19140 | 15600 | 12540 | 10300 | 8110 | 6260 | 4690 | 3380 | | |
| | | Pe | | | | | | 4.77 | 4.51 | 4.21 | 3.93 | 3.62 | 3.27 | 2.91 | 2.55 | | |
| | 40 | Qo | | | | | | 16830 | 13590 | 10800 | 8830 | 6880 | 5220 | 3820 | 2650 | | |
| | | Pe | | | | | | 5.56 | 5.14 | 4.70 | 4.35 | 3.92 | 3.49 | 3.05 | 2.62 | | |
| | 50 | Qo | | | | | | 14480 | 11550 | 9020 | 7280 | 5570 | 4120 | 2920 | | | |
| | | Pe | | | | | | 6.23 | 5.6 | 5.09 | 4.67 | 4.23 | 3.82 | 3.39 | | | |
| RFC4G-7.2 | 30 | Qo | 36400 | 33400 | 30600 | 28000 | 23250 | 19160 | 15610 | 12540 | 9910 | 7670 | 5760 | | | | |
| | | Pe | 4.21 | 4.37 | 4.49 | 4.57 | 4.63 | 4.56 | 4.40 | 4.15 | 3.85 | 3.51 | 3.15 | | | | |
| | 40 | Qo | 32500 | 29750 | 27200 | 24850 | 20550 | 16830 | 13600 | 10800 | 8400 | 6340 | 4590 | | | | |
| | | Pe | 5.83 | 5.86 | 5.86 | 5.82 | 5.66 | 5.40 | 5.06 | 4.67 | 4.24 | 3.80 | 3.36 | | | | |
| | 50 | Qo | 28500 | 26100 | 23800 | 21700 | 17830 | 14480 | 11560 | 9030 | 6850 | 4970 | | | | | |
| | | Pe | 7.28 | 7.19 | 7.07 | 6.93 | 6.57 | 6.14 | 5.65 | 5.13 | 4.61 | 4.09 | | | | | |
| RFC4D-6.2 | 30 | Qo | | | | | | 22950 | 18740 | 15120 | 12000 | 9340 | 7070 | | | | |
| | | Pe | | | | | | 5.76 | 5.48 | 5.16 | 4.80 | 4.39 | 3.91 | | | | |
| | 40 | Qo | | | | | | 20250 | 16410 | 13090 | 10230 | 7780 | 5700 | | | | |
| | | Pe | | | | | | 6.62 | 6.18 | 5.72 | 5.22 | 4.68 | 4.09 | | | | |
| | 50 | Qo | | | | | | 17510 | 14010 | 10990 | 8390 | 6160 | | | | | |
| | | Pe | | | | | | 7.50 | 6.91 | 6.30 | 5.67 | 5.00 | | | | | |
| RFC4G-9.2 | 30 | Qo | 43300 | 39750 | 36450 | 33350 | 27800 | 22950 | 18750 | 15120 | 12000 | 9330 | 7060 | | | | |
| | | Pe | 5.50 | 5.69 | 5.82 | 5.90 | 5.92 | 5.78 | 5.53 | 5.18 | 4.77 | 4.34 | 3.93 | | | | |
| | 40 | Qo | 38900 | 35650 | 32600 | 29800 | 24700 | 20250 | 16420 | 13100 | 10240 | 7790 | 5710 | | | | |
| | | Pe | 7.45 | 7.42 | 7.36 | 7.26 | 7.00 | 6.64 | 6.21 | 5.72 | 5.20 | 4.66 | 4.13 | | | | |
| | 50 | Qo | 34250 | 31350 | 28650 | 26100 | 21500 | 17500 | 14010 | 10990 | 8380 | 6150 | | | | | |
| | | Pe | 9.27 | 9.05 | 8.82 | 8.57 | 8.06 | 7.50 | 6.92 | 6.30 | 5.66 | 4.99 | | | | | |
| RFC4D-8.2 | 30 | Qo | | | | | | 30700 | 25200 | 20450 | 16370 | 12880 | 9830 | 7320 | 5220 | | |
| | | Pe | | | | | | 7.30 | 6.91 | 6.44 | 5.89 | 5.29 | 4.66 | 4.01 | 3.35 | | |
| | 40 | Qo | | | | | | 27100 | 22150 | 17840 | 14150 | 11000 | 8200 | 5920 | 4010 | | |
| | | Pe | | | | | | 8.39 | 7.77 | 7.11 | 6.42 | 5.70 | 5.06 | 4.31 | 3.51 | | |
| | 50 | Qo | | | | | | 23450 | 19050 | 15250 | 11880 | 9050 | 6640 | 4610 | 2910 | | |
| | | Pe | | | | | | 9.40 | 8.586 | 7.73 | 6.90 | 6.09 | 5.25 | 4.37 | 3.43 | | |

参数基于吸气温度20℃，50Hz，液体无过冷。Suction gas temperature 20℃, 50Hz, without liquid subcooling.
VARICOOL系统，附加冷却，改变吸气阀位置。VARICOOL system,additional cooling,position of suction valve changed.
附加冷却或限制吸气温度。Additional cooling or limited suction gas temperature.
附加冷却和喷液冷却系统。Additional cooling &liquid injection cooling system.



半封闭活塞式制冷压缩机
SEMI-HERMETIC RECIPROCATING COMPRESSOR

# PERFORMANCES

## 性能参数 R22

| 型号 Model | 冷凝温度 Condensing Temperature ℃ | 制冷量 Refrigerating Capacity Qo(W) 功率消耗 Power Consumption Pe(kW) | | | | | | | | | | | | | | | |
|---|---|---|---|---|---|---|---|---|---|---|---|---|---|---|---|---|---|
| | | 蒸发温度 Evaporating Temperature(℃) | | | | | | | | | | | | | | | |
| | | ↓ | 12.5 | 10 | 7.5 | 5 | 0 | -5 | -10 | -15 | -20 | -25 | -30 | -35 | -40 | -45 | -50 |
| RFC4G-12.2 | 30 | Qo | 57100 | 52400 | 48100 | 44000 | 36700 | 30350 | 24800 | 20050 | 15930 | 12410 | 9410 | | | | |
| | | Pe | 6.90 | 7.04 | 7.13 | 7.18 | 7.17 | 7.00 | 6.70 | 6.28 | 5.76 | 5.15 | 4.46 | | | | |
| | 40 | Qo | 50800 | 46650 | 42750 | 39100 | 32550 | 26800 | 21850 | 17550 | 13850 | 10680 | 7980 | | | | |
| | | Pe | 9.07 | 9.03 | 8.95 | 8.84 | 8.52 | 8.09 | 7.56 | 6.95 | 6.27 | 5.55 | 4.79 | | | | |
| | 50 | Qo | 44400 | 40700 | 37250 | 34050 | 28200 | 23150 | 18770 | 14980 | 11730 | 8950 | | | | | |
| | | Pe | 11.07 | 10.87 | 10.64 | 10.38 | 9.80 | 9.13 | 8.39 | 7.59 | 6.74 | 5.86 | | | | | |
| RFC4D-10.2 | 30 | Qo | | | | | | 35650 | 29250 | 23700 | 18940 | 14860 | 11330 | 8390 | 5920 | | |
| | | Pe | | | | | | 8.44 | 8.03 | 7.49 | 6.86 | 6.14 | 5.46 | 4.70 | 3.96 | | |
| | 40 | Qo | | | | | | 31450 | 25700 | 20700 | 16390 | 12710 | 9500 | 6850 | 4630 | | |
| | | Pe | | | | | | 9.74 | 9.03 | 8.25 | 7.42 | 6.56 | 5.68 | 4.83 | 4.02 | | |
| | 50 | Qo | | | | | | 27300 | 22150 | 17700 | 13800 | 10510 | 7700 | 5330 | 3350 | | |
| | | Pe | | | | | | 10.92 | 9.94 | 8.93 | 7.95 | 6.91 | 5.89 | 4.93 | 4.04 | | |
| RFC4G-15.2 | 30 | Qo | 68400 | 62800 | 57600 | 52700 | 43800 | 36150 | 29500 | 23750 | 18810 | 14590 | 11000 | | | | |
| | | Pe | 8.33 | 8.45 | 8.52 | 8.54 | 8.45 | 8.20 | 7.81 | 7.28 | 6.65 | 5.93 | 5.14 | | | | |
| | 40 | Qo | 60900 | 55900 | 51200 | 46800 | 38850 | 31950 | 26000 | 20800 | 16360 | 12550 | 9320 | | | | |
| | | Pe | 10.65 | 10.57 | 10.45 | 10.29 | 9.88 | 9.35 | 8.72 | 8.00 | 7.21 | 6.36 | 5.49 | | | | |
| | 50 | Qo | 53300 | 48900 | 44700 | 40800 | 3380 | 27700 | 22400 | 17860 | 13940 | 10610 | | | | | |
| | | Pe | 12.86 | 12.58 | 12.27 | 11.94 | 11.23 | 10.45 | 9.60 | 8.70 | 7.74 | 6.73 | | | | | |
| RFC4D-12.2 | 30 | Qo | | | | | | 41150 | 33750 | 27400 | 21900 | 17210 | 12990 | 9600 | 6760 | | |
| | | Pe | | | | | | 10.01 | 9.46 | 8.79 | 8.02 | 7.16 | 6.29 | 5.41 | 4.55 | | |
| | 40 | Qo | | | | | | 36650 | 29950 | 24150 | 19170 | 14910 | 11040 | 7960 | 5400 | | |
| | | Pe | | | | | | 11.46 | 10.60 | 9.66 | 8.66 | 7.64 | 6.66 | 5.67 | 4.75 | | |
| | 50 | Qo | | | | | | 32050 | 26050 | 20850 | 16150 | 12280 | 8980 | 6200 | 3880 | | |
| | | Pe | | | | | | 12.77 | 11.63 | 10.43 | 9.27 | 8.09 | 6.94 | 5.84 | 4.81 | | |
| RFC4G-20.2 | 30 | Qo | 79100 | 72600 | 66600 | 61000 | 50800 | 41900 | 34250 | 27600 | 21900 | 16980 | 12810 | | | | |
| | | Pe | 10.60 | 10.62 | 10.59 | 10.53 | 10.29 | 9.92 | 9.41 | 8.77 | 8.02 | 7.15 | 6.18 | | | | |
| | 40 | Qo | 70600 | 64800 | 59300 | 54200 | 45000 | 37000 | 30100 | 24100 | 18920 | 14500 | 10750 | | | | |
| | | Pe | 13.15 | 13.02 | 12.85 | 12.63 | 12.06 | 11.34 | 10.51 | 9.58 | 8.59 | 7.54 | 6.48 | | | | |
| | 50 | Qo | 61900 | 56700 | 51900 | 47400 | 39250 | 32150 | 26000 | 20650 | 16050 | 12130 | | | | | |
| | | Pe | 15.74 | 15.40 | 15.01 | 14.59 | 13.65 | 12.60 | 11.46 | 10.26 | 9.02 | 7.78 | | | | | |
| RFC4D-15.2 | 30 | Qo | | | | | | 52300 | 42700 | 34450 | 27350 | 21300 | 16400 | 12000 | 8310 | | |
| | | Pe | | | | | | 12.73 | 11.93 | 11.01 | 9.98 | 8.82 | 8.25 | 7.13 | 5.98 | | |
| | 40 | Qo | | | | | | 46850 | 38100 | 30500 | 24050 | 18500 | 13840 | 9800 | 6440 | | |
| | | Pe | | | | | | 14.91 | 13.81 | 12.56 | 11.19 | 9.76 | 8.67 | 7.30 | 5.90 | | |
| | 50 | Qo | | | | | | 41700 | 33700 | 26800 | 20900 | 15800 | 11500 | 7920 | 4970 | | |
| | | Pe | | | | | | 17.11 | 15.67 | 14.13 | 12.47 | 10.85 | 9.21 | 7.53 | 5.79 | | |
| RFC4G-25.2 | 30 | Qo | 99300 | 91200 | 83600 | 76500 | 63700 | 52600 | 42950 | 34650 | 27500 | 21400 | 16260 | | | | |
| | | Pe | 13.89 | 13.74 | 13.56 | 13.34 | 12.84 | 12.22 | 11.48 | 10.63 | 9.67 | 8.59 | 7.41 | | | | |
| | 40 | Qo | 89700 | 82300 | 75400 | 68900 | 57300 | 47150 | 38350 | 30800 | 24250 | 18670 | 13940 | | | | |
| | | Pe | 16.75 | 16.47 | 16.16 | 15.82 | 15.05 | 14.17 | 13.18 | 12.07 | 10.85 | 9.52 | 8.08 | | | | |
| | 50 | Qo | 80500 | 73800 | 67600 | 61700 | 51100 | 41950 | 33950 | 27050 | 21100 | 16030 | | | | | |
| | | Pe | 19.56 | 19.16 | 18.74 | 18.27 | 17.25 | 16.10 | 14.83 | 13.44 | 11.94 | 10.33 | | | | | |
| RFC4D-20.2 | 30 | Qo | | | | | | 60000 | 48950 | 39500 | 31400 | 24500 | 18940 | 13920 | 9670 | | |
| | | Pe | | | | | | 14.64 | 13.67 | 12.63 | 11.51 | 10.29 | 9.65 | 8.40 | 7.10 | | |
| | 40 | Qo | | | | | | 53700 | 43700 | 35100 | 27750 | 21500 | 16080 | 11430 | 7530 | | |
| | | Pe | | | | | | 17.39 | 16.04 | 14.60 | 13.07 | 11.42 | 10.35 | 8.75 | 7.14 | | |
| | 50 | Qo | | | | | | 47800 | 38750 | 30950 | 24200 | 18350 | 13390 | 9230 | 5790 | | |
| | | Pe | | | | | | 20.10 | 18.40 | 16.65 | 14.89 | 13.14 | 11.23 | 9.19 | 7.06 | | |
| RFC4G-30.2 | 30 | Qo | 114200 | 104800 | 96000 | 87800 | 73100 | 60400 | 49300 | 39800 | 31650 | 24700 | 18840 | | | | |
| | | Pe | 16.42 | 16.23 | 16.01 | 15.74 | 15.11 | 14.33 | 13.44 | 12.45 | 11.36 | 10.21 | 9.00 | | | | |
| | 40 | Qo | 103000 | 94500 | 86500 | 79100 | 65700 | 54000 | 44000 | 35350 | 27950 | 21650 | 16330 | | | | |
| | | Pe | 19.78 | 19.46 | 19.09 | 18.68 | 17.74 | 16.67 | 15.49 | 14.20 | 12.83 | 11.40 | 9.92 | | | | |
| | 50 | Qo | 92300 | 84600 | 77400 | 70700 | 58600 | 48100 | 39000 | 31200 | 24500 | 18810 | | | | | |
| | | Pe | 23.40 | 22.90 | 22.30 | 21.70 | 20.40 | 19.04 | 17.57 | 16.05 | 14.49 | 12.91 | | | | | |

参数基于吸气温度20℃，50Hz，液体无过冷。Suction gas temperature 20℃, 50Hz, without liquid subcooling.
VARICOOL系统，附加冷却，改变吸气阀位置。VARICOOL system,additional cooling,position of suction valve changed.
附加冷却或限制吸气温度。Additional cooling or limited suction gas temperature.
附加冷却和喷液冷却系统。Additional cooling &liquid injection cooling system.

# PERFORMANCES

## 性能参数 R22

| 型号 Model | 冷凝温度 Condensing Temperature ℃ | 制冷量 Refrigerating Capacity Qo(W) 功率消耗 Power Consumption Pe(kW) | | | | | | | | | | | | | | | |
|---|---|---|---|---|---|---|---|---|---|---|---|---|---|---|---|---|---|
| | | 蒸发温度 Evaporating Temperature(℃) | | | | | | | | | | | | | | | |
| | | ↓ | 12.5 | 10 | 7.5 | 5 | 0 | -5 | -10 | -15 | -20 | -25 | -30 | -35 | -40 | -45 | -50 |
| RFC6D-25.2 | 30 | Qo | | | | | | 78500 | 64100 | 51700 | 41050 | 31950 | 24600 | 18010 | 12460 | | |
| | | Pe | | | | | | 19.10 | 17.89 | 16.51 | 14.96 | 13.23 | 12.34 | 10.70 | 8.99 | | |
| | 40 | Qo | | | | | | 70300 | 57200 | 45850 | 36100 | 27750 | 20750 | 14710 | 9660 | | |
| | | Pe | | | | | | 22.40 | 20.70 | 18.84 | 16.79 | 14.63 | 13.01 | 10.96 | 8.86 | | |
| | 50 | Qo | | | | | | 62600 | 50600 | 40250 | 31350 | 23700 | 17240 | 11870 | 7440 | | |
| | | Pe | | | | | | 25.60 | 23.50 | 21.20 | 18.68 | 16.28 | 13.81 | 11.27 | 8.66 | | |
| RFC6G-35.2 | 30 | Qo | 149100 | 136900 | 125500 | 114800 | 95600 | 79000 | 64500 | 52000 | 41300 | 32200 | 24400 | | | | |
| | | Pe | 20.90 | 20.60 | 20.40 | 20.00 | 19.27 | 18.34 | 17.24 | 15.96 | 14.52 | 12.90 | 11.12 | | | | |
| | 40 | Qo | 134600 | 123500 | 113200 | 10350 | 86000 | 70800 | 57600 | 46200 | 36400 | 28050 | 20900 | | | | |
| | | Pe | 25.20 | 24.70 | 24.30 | 23.70 | 22.60 | 21.30 | 19.78 | 18.12 | 16.29 | 14.30 | 12.14 | | | | |
| | 50 | Qo | 120900 | 110800 | 101400 | 92700 | 76800 | 63000 | 51000 | 40600 | 31700 | 24050 | | | | | |
| | | Pe | 29.40 | 28.80 | 28.10 | 27.40 | 25.90 | 24.20 | 22.30 | 20.20 | 17.92 | 15.50 | | | | | |
| RFC6D-30.2 | 30 | Qo | | | | | | 90000 | 73500 | 59300 | 47100 | 36750 | 28400 | 20850 | 14480 | | |
| | | Pe | | | | | | 22.00 | 20.50 | 18.96 | 17.27 | 15.43 | 14.48 | 12.59 | 10.65 | | |
| | 40 | Qo | | | | | | 80600 | 65600 | 52700 | 41600 | 32200 | 24100 | 17130 | 11280 | | |
| | | Pe | | | | | | 26.10 | 24.10 | 21.90 | 19.61 | 17.14 | 15.50 | 13.10 | 10.68 | | |
| | 50 | Qo | | | | | | 71700 | 58200 | 46500 | 36300 | 27500 | 20050 | 13840 | 8670 | | |
| | | Pe | | | | | | 30.10 | 27.60 | 25.00 | 22.31 | 19.71 | 16.85 | 13.79 | 10.58 | | |
| RFC6G-40.2 | 30 | Qo | 171300 | 157200 | 144100 | 131800 | 109700 | 90600 | 74000 | 59700 | 47500 | 37100 | 28300 | | | | |
| | | Pe | 24.60 | 24.40 | 24.00 | 23.60 | 22.70 | 21.50 | 20.20 | 18.68 | 17.05 | 15.32 | 13.51 | | | | |
| | 40 | Qo | 154600 | 141800 | 129800 | 118600 | 98500 | 81100 | 66000 | 53000 | 41900 | 32450 | 24500 | | | | |
| | | Pe | 29.70 | 29.20 | 28.60 | 28.00 | 26.60 | 25.00 | 23.20 | 21.30 | 19.26 | 17.11 | 14.89 | | | | |
| | 50 | Qo | 138500 | 127000 | 116200 | 106100 | 88000 | 72200 | 58500 | 46800 | 36750 | 28200 | | | | | |
| | | Pe | 35.20 | 34.40 | 33.50 | 32.60 | 30.70 | 28.60 | 26.40 | 24.10 | 21.70 | 19.38 | | | | | |
| RFC6D-40.2 | 30 | Qo | | | | | | 106100 | 86800 | 70100 | 55900 | 43800 | 34000 | 25100 | 17600 | | |
| | | Pe | | | | | | 27.40 | 25.50 | 23.50 | 21.20 | 18.92 | 17.07 | 14.95 | 12.96 | | |
| | 40 | Qo | | | | | | 95300 | 77700 | 62600 | 49650 | 38700 | 29150 | 20900 | 13960 | | |
| | | Pe | | | | | | 31.90 | 29.50 | 27.00 | 24.30 | 21.40 | 18.61 | 15.80 | 13.06 | | |
| | 50 | Qo | | | | | | 85100 | 69200 | 55600 | 43600 | 33250 | 24450 | 17060 | 10890 | | |
| | | Pe | | | | | | 36.40 | 33.50 | 30.40 | 27.04 | 23.71 | 20.21 | 16.60 | 12.94 | | |
| RFC6G-50.2 | 30 | Qo | 201400 | 184800 | 169400 | 155000 | 129100 | 106700 | 87300 | 70600 | 56300 | 44150 | 33900 | | | | |
| | | Pe | 31.90 | 31.40 | 30.80 | 30.20 | 28.70 | 27.10 | 25.30 | 23.30 | 21.20 | 18.97 | 16.66 | | | | |
| | 40 | Qo | 181700 | 166700 | 152800 | 139800 | 116300 | 95900 | 78300 | 63100 | 50100 | 39050 | 29700 | | | | |
| | | Pe | 37.60 | 36.90 | 36.10 | 35.20 | 33.30 | 31.30 | 29.00 | 26.60 | 24.00 | 21.30 | 18.44 | | | | |
| | 50 | Qo | 163200 | 149700 | 137100 | 125300 | 104100 | 85700 | 69700 | 56000 | 44250 | 34250 | | | | | |
| | | Pe | 43.00 | 42.10 | 41.10 | 40.10 | 37.90 | 35.50 | 32.80 | 29.90 | 26.80 | 23.50 | | | | | |
| RFC6DS-20.2 | 30 | Qo | | | | | | | | | 35500 | 29700 | 24500 | 19970 | 15960 | 12400 | 9180 |
| | | Pe | | | | | | | | | 15.46 | 14.21 | 12.95 | 11.68 | 10.41 | 9.15 | 7.91 |
| | 40 | Qo | | | | | | | | | 34750 | 29100 | 24050 | 19560 | 15560 | 11940 | 8590 |
| | | Pe | | | | | | | | | 17.61 | 16.12 | 14.64 | 13.15 | 11.67 | 10.19 | 8.71 |
| | 50 | Qo | | | | | | | | | 34050 | 28500 | 23600 | 19210 | 15220 | | |
| | | Pe | | | | | | | | | 19.74 | 18.00 | 16.29 | 14.56 | 12.80 | | |
| RFC6DS-25.2 | 30 | Qo | | | | | | | | | 40800 | 34050 | 28150 | 22900 | 18320 | 14230 | 10540 |
| | | Pe | | | | | | | | | 17.75 | 16.31 | 14.86 | 13.41 | 11.95 | 10.51 | 9.08 |
| | 40 | Qo | | | | | | | | | 39900 | 33400 | 27600 | 22450 | 17860 | 13700 | 9860 |
| | | Pe | | | | | | | | | 20.21 | 18.51 | 16.81 | 15.10 | 13.40 | 11.70 | 10.00 |
| | 50 | Qo | | | | | | | | | 39100 | 32750 | 27100 | 22050 | 17470 | | |
| | | Pe | | | | | | | | | 22.66 | 20.67 | 18.70 | 16.72 | 14.70 | | |
| RFC6DS-30.2 | 30 | Qo | | | | | | | | | 48800 | 40750 | 33700 | 27400 | 21900 | 17030 | 12610 |
| | | Pe | | | | | | | | | 21.23 | 19.52 | 17.78 | 16.04 | 14.30 | 12.57 | 10.86 |
| | 40 | Qo | | | | | | | | | 47750 | 39950 | 33000 | 26850 | 21350 | 16390 | 11790 |
| | | Pe | | | | | | | | | 24.18 | 22.15 | 20.11 | 18.07 | 16.03 | 13.99 | 11.96 |
| | 50 | Qo | | | | | | | | | 46750 | 39200 | 32450 | 26400 | 20900 | | |
| | | Pe | | | | | | | | | 27.12 | 24.73 | 22.37 | 20.01 | 17.59 | | |

参数基于吸气温度20℃，50Hz，液体无过冷。Suction gas temperature 20℃, 50Hz, without liquid subcooling.
附加冷却或限制吸气温度。Additional cooling or limited suction gas temperature.
附加冷却和喷液冷却系统。Additional cooling &liquid injection cooling system.



半封闭活塞式制冷压缩机
SEMI-HERMETIC RECIPROCATING COMPRESSOR

# PERFORMANCES

## 性能参数 R404A/R507A

| 型号 Model | 冷凝温度 Condensing Temperature ℃ | 制冷量 Refrigerating Capacity Qo(W) 功率消耗 Power Consumption Pe(kW) | | | | | | | | | | | | | | | | | |
|---|---|---|---|---|---|---|---|---|---|---|---|---|---|---|---|---|---|---|---|
| | | 蒸发温度 Evaporating Temperature(℃) | | | | | | | | | | | | | | | | | |
| | | ↓ | 7.5 | 5 | 0 | -5 | -10 | -15 | -20 | -25 | -30 | -35 | -40 | -45 | -50 | -55 | -60 | -65 | -70 |
| RFC4D-3.2 | 30 | Qo | | | | 13720 | 11330 | 9260 | 7470 | 5940 | 4630 | 3510 | 2580 | 1800 | | | | | |
| | | Pe | | | | 3.85 | 3.66 | 3.44 | 3.18 | 2.90 | 2.58 | 2.24 | 1.88 | 1.50 | | | | | |
| | 40 | Qo | | | | 11560 | 9520 | 7740 | 6200 | 4880 | 3750 | 2790 | 1980 | 1310 | | | | | |
| | | Pe | | | | 4.42 | 4.10 | 3.76 | 3.40 | 3.03 | 2.63 | 2.23 | 1.82 | 1.40 | | | | | |
| | 50 | Qo | | | | 9450 | 7740 | 6260 | 4970 | 3860 | 2910 | 2110 | 1430 | | | | | | |
| | | Pe | | | | 4.91 | 4.48 | 4.04 | 3.59 | 3.13 | 2.67 | 2.22 | 1.77 | | | | | | |
| RFC4G-5.2 | 30 | Qo | 21550 | 19790 | 16590 | 13810 | 11400 | 9320 | 7520 | 5970 | 4650 | 3530 | 2580 | | | | | | |
| | | Pe | 3.78 | 3.79 | 3.76 | 3.67 | 3.52 | 3.32 | 3.07 | 2.79 | 2.48 | 2.15 | 1.81 | | | | | | |
| | 40 | Qo | 18240 | 16740 | 14020 | 11650 | 9580 | 7790 | 6240 | 4900 | 3760 | 2790 | 1970 | | | | | | |
| | | Pe | 4.65 | 4.60 | 4.46 | 4.25 | 3.99 | 3.69 | 3.35 | 2.98 | 2.59 | 2.18 | 1.76 | | | | | | |
| | 50 | Qo | 14970 | 13730 | 11470 | 9500 | 7780 | 6280 | 4980 | 3860 | 2900 | 2090 | 1410 | | | | | | |
| | | Pe | 5.44 | 5.33 | 5.07 | 4.75 | 4.39 | 3.98 | 3.55 | 3.10 | 2.62 | 2.14 | 1.65 | | | | | | |
| RFC4D-4.2 | 30 | Qo | | | | 17330 | 14290 | 11660 | 9400 | 7450 | 5800 | 4390 | 3210 | 2220 | | | | | |
| | | Pe | | | | 4.61 | 4.39 | 4.12 | 3.81 | 3.45 | 3.06 | 2.65 | 2.22 | 1.78 | | | | | |
| | 40 | Qo | | | | 14440 | 11870 | 9650 | 7720 | 6070 | 4650 | 3450 | 2440 | 1590 | | | | | |
| | | Pe | | | | 5.28 | 4.93 | 4.53 | 4.10 | 3.64 | 3.15 | 2.65 | 2.14 | 1.63 | | | | | |
| | 50 | Qo | | | | 11650 | 9550 | 7720 | 6130 | 4760 | 3590 | 2590 | 1750 | | | | | | |
| | | Pe | | | | 5.86 | 5.39 | 4.87 | 4.33 | 3.77 | 3.19 | 2.60 | 2.02 | | | | | | |
| RFC4G-6.2 | 30 | Qo | 27500 | 25200 | 21100 | 17580 | 14500 | 11830 | 9530 | 7550 | 5860 | 4420 | 3210 | | | | | | |
| | | Pe | 4.73 | 4.75 | 4.73 | 4.62 | 4.43 | 4.17 | 3.85 | 3.48 | 3.08 | 2.65 | 2.21 | | | | | | |
| | 40 | Qo | 23150 | 21250 | 17780 | 14750 | 12120 | 9840 | 7860 | 6160 | 4700 | 3470 | 2420 | | | | | | |
| | | Pe | 5.87 | 5.81 | 5.62 | 5.35 | 5.01 | 4.61 | 4.17 | 3.68 | 3.17 | 2.65 | 2.12 | | | | | | |
| | 50 | Qo | 18930 | 17360 | 14490 | 11980 | 9790 | 7890 | 6240 | 4820 | 3600 | 2570 | 1710 | | | | | | |
| | | Pe | 6.86 | 6.72 | 6.37 | 5.95 | 5.47 | 4.95 | 4.38 | 3.79 | 3.19 | 2.58 | 1.97 | | | | | | |
| RFC4D-5.2 | 30 | Qo | | | | 21100 | 17420 | 14220 | 11470 | 9100 | 7080 | 5370 | 3930 | 2730 | | | | | |
| | | Pe | | | | 5.52 | 5.29 | 4.99 | 4.62 | 4.18 | 3.70 | 3.19 | 2.66 | 2.11 | | | | | |
| | 40 | Qo | | | | 17650 | 14520 | 11810 | 9460 | 7440 | 5720 | 4250 | 3010 | 1980 | | | | | |
| | | Pe | | | | 6.34 | 5.95 | 5.50 | 4.99 | 4.43 | 3.83 | 3.22 | 2.60 | 1.98 | | | | | |
| | 50 | Qo | | | | 14300 | 11730 | 9490 | 7550 | 5880 | 4440 | 3220 | 2190 | | | | | | |
| | | Pe | | | | 7.07 | 6.53 | 5.93 | 5.29 | 4.62 | 3.92 | 3.22 | 2.52 | | | | | | |
| RFC4G-7.2 | 30 | Qo | 32600 | 29900 | 25000 | 20800 | 17120 | 13950 | 11210 | 8860 | 6860 | 5160 | 3720 | | | | | | |
| | | Pe | 5.49 | 5.52 | 5.51 | 5.39 | 5.18 | 4.88 | 4.52 | 4.10 | 3.63 | 3.12 | 2.59 | | | | | | |
| | 40 | Qo | 27500 | 25200 | 21100 | 17490 | 14350 | 11630 | 9270 | 7250 | 5510 | 4040 | 2800 | | | | | | |
| | | Pe | 6.81 | 6.75 | 6.55 | 6.26 | 5.88 | 5.43 | 4.91 | 4.35 | 3.74 | 3.11 | 2.47 | | | | | | |
| | 50 | Qo | 22500 | 20600 | 17210 | 14230 | 11620 | 9350 | 7380 | 5690 | 4240 | 3010 | 1980 | | | | | | |
| | | Pe | 7.98 | 7.83 | 7.46 | 7.00 | 6.46 | 5.86 | 5.20 | 4.50 | 3.78 | 3.03 | 2.28 | | | | | | |
| RFC4D-6.2 | 30 | Qo | | | | 24950 | 20650 | 16900 | 13670 | 10900 | 8540 | 6530 | 4840 | 3420 | | | | | |
| | | Pe | | | | 6.65 | 6.36 | 5.98 | 5.52 | 5.01 | 4.45 | 3.86 | 3.25 | 2.63 | | | | | |
| | 40 | Qo | | | | 21100 | 17420 | 14200 | 11420 | 9030 | 6980 | 5240 | 3770 | 2540 | | | | | |
| | | Pe | | | | 7.64 | 7.17 | 6.63 | 6.03 | 5.37 | 4.67 | 3.94 | 3.21 | 2.47 | | | | | |
| | 50 | Qo | | | | 17320 | 14220 | 11520 | 9190 | 7180 | 5460 | 4000 | 2770 | | | | | | |
| | | Pe | | | | 8.61 | 7.98 | 7.28 | 6.51 | 5.71 | 4.87 | 4.01 | 3.14 | | | | | | |
| RFC4G-9.2 | 30 | Qo | 38800 | 35600 | 29900 | 24900 | 20600 | 16880 | 13660 | 10890 | 8530 | 6530 | 4840 | | | | | | |
| | | Pe | 6.85 | 6.87 | 6.82 | 6.64 | 6.36 | 5.98 | 5.53 | 5.01 | 4.45 | 3.86 | 3.25 | | | | | | |
| | 40 | Qo | 32850 | 30150 | 25300 | 21100 | 17410 | 14210 | 11440 | 9050 | 7000 | 5250 | 3770 | | | | | | |
| | | Pe | 8.35 | 8.27 | 8.01 | 7.64 | 7.18 | 6.63 | 6.02 | 5.36 | 4.66 | 3.94 | 3.21 | | | | | | |
| | 50 | Qo | 27050 | 24850 | 20900 | 17380 | 14310 | 11620 | 9280 | 7240 | 5480 | 3960 | 2660 | | | | | | |
| | | Pe | 9.80 | 9.62 | 9.16 | 8.61 | 7.98 | 7.28 | 6.52 | 5.71 | 4.87 | 4.01 | 3.14 | | | | | | |
| RFC4D-8.2 | 30 | Qo | | | | 33050 | 27250 | 22200 | 17890 | 14170 | 10990 | 8300 | 6040 | 4150 | | | | | |
| | | Pe | | | | 8.74 | 8.17 | 7.55 | 6.87 | 6.16 | 5.41 | 4.64 | 3.86 | 3.07 | | | | | |
| | 40 | Qo | | | | 27750 | 22800 | 18480 | 14760 | 11560 | 8830 | 6520 | 4580 | 2960 | | | | | |
| | | Pe | | | | 9.86 | 9.05 | 8.20 | 7.34 | 6.46 | 5.57 | 4.66 | 3.74 | 2.81 | | | | | |
| | 50 | Qo | | | | | 18350 | 14790 | 11710 | 9070 | 6800 | 4880 | 3260 | | | | | | |
| | | Pe | | | | | 9.74 | 8.71 | 7.68 | 6.65 | 5.61 | 4.55 | 3.46 | | | | | | |

参数基于吸气温度20℃，50Hz，液体无过冷。Suction gas temperature 20℃, 50Hz, without liquid subcooling.
附加冷却或限制吸气温度。Additional cooling or limited suction gas temperature.

# PERFORMANCES

## 性能参数 R404A/R507A

| 型号 Model | 冷凝温度 Condensing Temperature ℃ | 制冷量 Refrigerating Capacity Qo(W) 功率消耗 Power Consumption Pe(kW) | | | | | | | | | | | | | | | | | |
|---|---|---|---|---|---|---|---|---|---|---|---|---|---|---|---|---|---|---|---|
| | | 蒸发温度 Evaporating Temperature(℃) | | | | | | | | | | | | | | | | | |
| | | ↓ | 7.5 | 5 | 0 | -5 | -10 | -15 | -20 | -25 | -30 | -35 | -40 | -45 | -50 | -55 | -60 | -65 | -70 |
| RFC4G-12.2 | 30 | Qo | 51500 | 47200 | 39450 | 32750 | 26900 | 21900 | 17550 | 13830 | 10650 | 7960 | 5700 | | | | | | |
| | | Pe | 8.63 | 8.63 | 8.49 | 8.22 | 7.81 | 7.29 | 6.68 | 6.00 | 5.26 | 4.48 | 3.68 | | | | | | |
| | 40 | Qo | 43500 | 39850 | 33300 | 27550 | 22600 | 18260 | 14530 | 11320 | 8590 | 6270 | 4320 | | | | | | |
| | | Pe | 10.66 | 10.47 | 9.99 | 9.40 | 8.72 | 7.96 | 7.15 | 6.29 | 5.40 | 4.51 | 3.62 | | | | | | |
| | 50 | Qo | 35400 | 32400 | 27050 | 22350 | 18230 | 14650 | 11550 | 8880 | 6590 | 4650 | 3020 | | | | | | |
| | | Pe | 12.28 | 11.93 | 11.17 | 10.33 | 9.42 | 8.45 | 7.45 | 6.42 | 5.39 | 4.36 | 3.36 | | | | | | |
| RFC4D-10.2 | 30 | Qo | | | | 38300 | 31600 | 25750 | 20700 | 16390 | 12690 | 9550 | 6910 | 4690 | | | | | |
| | | Pe | | | | 10.07 | 9.37 | 8.64 | 7.87 | 7.06 | 6.22 | 5.34 | 4.43 | 3.48 | | | | | |
| | 40 | Qo | | | | 32300 | 26500 | 21500 | 17130 | 13400 | 10220 | 7520 | 5240 | 3350 | | | | | |
| | | Pe | | | | 11.39 | 10.45 | 9.47 | 8.45 | 7.41 | 6.35 | 5.30 | 4.25 | 3.22 | | | | | |
| | 50 | Qo | | | | | 21500 | 17290 | 13660 | 10550 | 7890 | 5640 | 3760 | | | | | | |
| | | Pe | | | | | 11.26 | 10.04 | 8.80 | 7.53 | 6.28 | 5.05 | 3.88 | | | | | | |
| RFC4G-15.2 | 30 | Qo | 61500 | 56400 | 47100 | 39050 | 32100 | 26000 | 20800 | 16320 | 12490 | 9240 | 6500 | | | | | | |
| | | Pe | 10.23 | 10.19 | 9.96 | 9.58 | 9.06 | 8.43 | 7.70 | 6.90 | 6.04 | 5.14 | 4.23 | | | | | | |
| | 40 | Qo | 52200 | 47850 | 39950 | 33050 | 27050 | 21850 | 17360 | 13490 | 10190 | 7390 | 5020 | | | | | | |
| | | Pe | 12.41 | 12.14 | 11.51 | 10.79 | 9.99 | 9.11 | 8.18 | 7.19 | 6.17 | 5.13 | 4.07 | | | | | | |
| | 50 | Qo | 42600 | 39000 | 32500 | 26750 | 21800 | 17430 | 13680 | 10460 | 7710 | 5380 | 3420 | | | | | | |
| | | Pe | 14.27 | 13.78 | 12.78 | 11.73 | 10.66 | 9.55 | 8.43 | 7.28 | 6.11 | 4.94 | 3.75 | | | | | | |
| RFC4D-12.2 | 30 | Qo | | | | 44000 | 36250 | 29550 | 23750 | 18810 | 14580 | 11000 | 7980 | 5470 | | | | | |
| | | Pe | | | | 11.88 | 11.15 | 10.30 | 9.35 | 8.35 | 7.30 | 6.23 | 5.19 | 4.18 | | | | | |
| | 40 | Qo | | | | 37300 | 30600 | 24800 | 19810 | 15510 | 11840 | 8740 | 6120 | 3950 | | | | | |
| | | Pe | | | | 13.39 | 12.33 | 11.18 | 9.97 | 8.71 | 7.44 | 6.19 | 4.99 | 3.87 | | | | | |
| | 50 | Qo | | | | | 24850 | 20000 | 15820 | 12210 | 9120 | 6510 | 4300 | | | | | | |
| | | Pe | | | | | 13.28 | 11.83 | 10.37 | 8.91 | 7.45 | 6.01 | 4.60 | | | | | | |
| RFC4G-20.2 | 30 | Qo | 71000 | 65100 | 54500 | 45250 | 37200 | 30250 | 24250 | 19070 | 14640 | 10860 | 7660 | | | | | | |
| | | Pe | 12.24 | 12.20 | 11.94 | 11.47 | 10.82 | 10.04 | 9.14 | 8.16 | 7.12 | 6.07 | 5.02 | | | | | | |
| | 40 | Qo | 60500 | 55400 | 46250 | 38200 | 31250 | 25200 | 20000 | 15530 | 11730 | 8510 | 5820 | | | | | | |
| | | Pe | 14.78 | 14.49 | 13.79 | 12.91 | 11.91 | 10.80 | 9.62 | 8.40 | 7.16 | 5.95 | 4.78 | | | | | | |
| | 50 | Qo | 49900 | 45650 | 37900 | 31100 | 25250 | 20150 | 15760 | 12010 | 8840 | 6180 | 3980 | | | | | | |
| | | Pe | 16.78 | 16.28 | 15.18 | 13.95 | 12.63 | 11.24 | 9.81 | 8.38 | 6.97 | 5.63 | 4.37 | | | | | | |
| RFC4D-15.2 | 30 | Qo | | | | 58500 | 48400 | 39700 | 32200 | 25750 | 20250 | 15560 | 11630 | 8350 | | | | | |
| | | Pe | | | | 15.78 | 14.84 | 13.79 | 12.63 | 11.40 | 10.10 | 8.77 | 7.43 | 6.10 | | | | | |
| | 40 | Qo | | | | 49850 | 41150 | 33600 | 27100 | 21500 | 16730 | 12660 | 9240 | 6380 | | | | | |
| | | Pe | | | | 18.16 | 16.80 | 15.34 | 13.82 | 12.25 | 10.65 | 9.05 | 7.47 | 5.93 | | | | | |
| | 50 | Qo | | | | | 33950 | 27600 | 22050 | 17330 | 13270 | 9820 | 6920 | | | | | | |
| | | Pe | | | | | 18.50 | 16.67 | 14.80 | 12.91 | 11.03 | 9.17 | 7.37 | | | | | | |
| RFC4G-25.2 | 30 | Qo | 90700 | 83200 | 69700 | 57900 | 47750 | 38950 | 31350 | 24800 | 19210 | 14460 | 10460 | | | | | | |
| | | Pe | 16.14 | 16.07 | 15.72 | 15.14 | 14.36 | 13.41 | 12.32 | 11.11 | 9.81 | 8.46 | 7.08 | | | | | | |
| | 40 | Qo | 77400 | 71000 | 59500 | 49400 | 40650 | 33000 | 26450 | 20800 | 15930 | 11800 | 8320 | | | | | | |
| | | Pe | 19.56 | 19.22 | 18.37 | 17.32 | 16.11 | 14.76 | 13.31 | 11.78 | 10.20 | 8.60 | 7.00 | | | | | | |
| | 50 | Qo | 64500 | 59100 | 49500 | 41000 | 33600 | 27200 | 21600 | 16830 | 12740 | 9260 | 6340 | | | | | | |
| | | Pe | 22.78 | 22.18 | 20.84 | 19.33 | 17.71 | 15.98 | 14.18 | 12.34 | 10.49 | 8.65 | 6.86 | | | | | | |
| RFC4D-20.2 | 30 | Qo | | | | 67100 | 55500 | 45400 | 36750 | 29350 | 23000 | 17600 | 13060 | 9260 | | | | | |
| | | Pe | | | | 18.22 | 17.12 | 15.89 | 14.55 | 13.12 | 11.62 | 10.08 | 8.53 | 6.97 | | | | | |
| | 40 | Qo | | | | 57200 | 47300 | 38700 | 31200 | 24800 | 19250 | 14540 | 10540 | 7160 | | | | | |
| | | Pe | | | | 20.94 | 19.36 | 17.68 | 15.93 | 14.13 | 12.30 | 10.47 | 8.65 | 6.89 | | | | | |
| | 50 | Qo | | | | | 38750 | 31650 | 25450 | 20100 | 15480 | 11510 | 8120 | | | | | | |
| | | Pe | | | | | 21.25 | 19.15 | 17.02 | 14.87 | 12.73 | 10.63 | 8.60 | | | | | | |
| RFC4G-30.2 | 30 | Qo | 103800 | 95300 | 79900 | 66500 | 54900 | 44900 | 36250 | 28800 | 22450 | 17040 | 12480 | | | | | | |
| | | Pe | 19.21 | 19.07 | 18.57 | 17.81 | 16.84 | 15.70 | 14.41 | 13.02 | 11.57 | 10.09 | 8.61 | | | | | | |
| | 40 | Qo | 89100 | 81800 | 68600 | 57000 | 47000 | 38250 | 30700 | 24200 | 18610 | 13860 | 9850 | | | | | | |
| | | Pe | 23.37 | 22.88 | 21.73 | 20.38 | 18.88 | 17.26 | 15.56 | 13.81 | 12.06 | 10.33 | 8.68 | | | | | | |
| | 50 | Qo | 74300 | 68200 | 57100 | 47400 | 38900 | 31500 | 25100 | 19580 | 14840 | 10810 | 7410 | | | | | | |
| | | Pe | 27.01 | 26.20 | 24.46 | 22.58 | 20.60 | 18.56 | 16.50 | 14.45 | 12.45 | 10.54 | 8.76 | | | | | | |

参数基于吸气温度20℃，50Hz，液体无过冷。Suction gas temperature 20℃, without liquid subcooling.

附加冷却或限制吸气温度。Additional cooling or limited suction gas temperature.



半封闭活塞式制冷压缩机
SEMI-HERMETIC RECIPROCATING COMPRESSOR

PERFORMANCES

性能参数 R404A/R507A

| 型号 Model | 冷凝温度 Condensing Temperature ℃ | 制冷量 Refrigerating Capacity Qo(W) 功率消耗 Power Consumption Pe(kW) | | | | | | | | | | | | | | | | | |
|---|---|---|---|---|---|---|---|---|---|---|---|---|---|---|---|---|---|---|---|
| | | 蒸发温度 Evaporating Temperature(℃) | | | | | | | | | | | | | | | | | |
| | | ↓ | 7.5 | 5 | 0 | -5 | -10 | -15 | -20 | -25 | -30 | -35 | -40 | -45 | -50 | -55 | -60 | -65 | -70 |
| RFC6D-25.2 | 30 | Qo | | | | 87900 | 72500 | 59300 | 47800 | 38000 | 29700 | 22650 | 16740 | 11850 | | | | | |
| | | Pe | | | | 23.50 | 22.15 | 20.58 | 18.83 | 16.94 | 14.95 | 12.89 | 10.81 | 8.75 | | | | | |
| | 40 | Qo | | | | 74700 | 61600 | 50200 | 40400 | 31900 | 24700 | 18590 | 13440 | 9130 | | | | | |
| | | Pe | | | | 27.20 | 25.18 | 23.00 | 20.68 | 18.28 | 15.82 | 13.36 | 10.92 | 8.54 | | | | | |
| | 50 | Qo | | | | | 50500 | 41150 | 33000 | 25950 | 19920 | 14760 | 10390 | | | | | | |
| | | Pe | | | | | 27.78 | 25.02 | 22.18 | 19.31 | 16.43 | 13.59 | 10.93 | | | | | | |
| RFC6G-35.2 | 30 | Qo | 136000 | 124800 | 104500 | 86900 | 71600 | 58400 | 47000 | 37200 | 28800 | 21700 | 15720 | | | | | | |
| | | Pe | 25.11 | 24.84 | 24.07 | 23.04 | 21.77 | 20.29 | 28.64 | 16.83 | 14.91 | 12.89 | 10.81 | | | | | | |
| | 40 | Qo | 116300 | 106600 | 89300 | 74100 | 60900 | 49450 | 39600 | 31100 | 23800 | 17670 | 12480 | | | | | | |
| | | Pe | 29.81 | 29.20 | 27.79 | 26.14 | 24.30 | 22.29 | 20.14 | 17.88 | 15.53 | 13.13 | 10.71 | | | | | | |
| | 50 | Qo | 96600 | 88600 | 74100 | 61400 | 50400 | 40700 | 32400 | 25250 | 19160 | 14000 | 9670 | | | | | | |
| | | Pe | 34.17 | 33.23 | 31.19 | 28.96 | 26.56 | 24.04 | 21.41 | 18.71 | 15.96 | 13.20 | 10.45 | | | | | | |
| RFC6D-30.2 | 30 | Qo | | | | 98300 | 81200 | 66400 | 53600 | 42700 | 33350 | 25400 | 18760 | 13210 | | | | | |
| | | Pe | | | | 26.77 | 2.507 | 23.21 | 21.20 | 19.08 | 16.84 | 14.54 | 12.17 | 9.76 | | | | | |
| | 40 | Qo | | | | 84000 | 69300 | 56600 | 45550 | 36050 | 27900 | 21000 | 15130 | 10210 | | | | | |
| | | Pe | | | | 30.86 | 28.50 | 26.00 | 23.38 | 20.68 | 17.90 | 15.07 | 12.21 | 9.34 | | | | | |
| | 50 | Qo | | | | | 57600 | 46900 | 37600 | 29550 | 22600 | 16720 | 11710 | | | | | | |
| | | Pe | | | | | 31.43 | 28.35 | 25.18 | 21.94 | 18.67 | 15.37 | 12.06 | | | | | | |
| RFC6G-40.2 | 30 | Qo | 156100 | 143200 | 120000 | 99900 | 82500 | 67400 | 54300 | 43150 | 33600 | 25550 | 18730 | | | | | | |
| | | Pe | 30.46 | 29.91 | 28.66 | 27.20 | 25.57 | 23.77 | 21.82 | 19.75 | 17.56 | 15.28 | 12.93 | | | | | | |
| | 40 | Qo | 133400 | 122400 | 102700 | 85400 | 70300 | 57300 | 46000 | 36300 | 28000 | 20900 | 14940 | | | | | | |
| | | Pe | 35.49 | 34.61 | 32.70 | 30.62 | 28.38 | 26.02 | 23.54 | 20.96 | 18.30 | 15.57 | 12.80 | | | | | | |
| | 50 | Qo | 110800 | 101800 | 85400 | 70900 | 58300 | 47350 | 37800 | 29550 | 22500 | 16450 | 11330 | | | | | | |
| | | Pe | 40.19 | 38.97 | 36.42 | 33.73 | 30.91 | 27.99 | 24.99 | 21.92 | 18.79 | 15.63 | 12.46 | | | | | | |
| RFC6D-40.2 | 30 | Qo | | | | 118800 | 98100 | 80100 | 64700 | 51400 | 40100 | 30500 | 22400 | 15600 | | | | | |
| | | Pe | | | | 31.46 | 29.74 | 27.69 | 25.37 | 22.84 | 20.14 | 17.34 | 14.49 | 11.63 | | | | | |
| | 40 | Qo | | | | 100900 | 83100 | 67600 | 54300 | 42800 | 32950 | 24600 | 17570 | 11680 | | | | | |
| | | Pe | | | | 36.00 | 33.43 | 30.59 | 27.55 | 24.36 | 21.06 | 17.73 | 14.40 | 11.14 | | | | | |
| | 50 | Qo | | | | | 68300 | 55300 | 44050 | 34300 | 26050 | 18990 | 13060 | | | | | | |
| | | Pe | | | | | 36.68 | 33.08 | 29.33 | 25.49 | 21.62 | 17.76 | 13.98 | | | | | | |
| RFC6G-50.2 | 30 | Qo | 184400 | 169300 | 142200 | 118600 | 98100 | 80400 | 65200 | 52100 | 40900 | 31400 | 23450 | | | | | | |
| | | Pe | 36.24 | 35.76 | 34.49 | 32.87 | 30.95 | 28.79 | 26.43 | 23.94 | 21.38 | 18.79 | 16.23 | | | | | | |
| | 40 | Qo | 157900 | 145000 | 121700 | 101300 | 83600 | 68300 | 55000 | 43600 | 33850 | 25600 | 18620 | | | | | | |
| | | Pe | 43.13 | 42.10 | 39.80 | 37.22 | 34.43 | 31.47 | 28.40 | 25.28 | 22.15 | 19.09 | 16.14 | | | | | | |
| | 50 | Qo | 131000 | 120200 | 100800 | 83800 | 68900 | 56000 | 44800 | 35150 | 26950 | 19960 | 14090 | | | | | | |
| | | Pe | 49.80 | 48.21 | 44.85 | 41.30 | 37.60 | 33.83 | 30.02 | 26.24 | 22.53 | 18.97 | 15.59 | | | | | | |
| RFC6DS-20.2 | 30 | Qo | | | | | | | | 31900 | 27450 | 23300 | 19440 | 15910 | 12760 | 10020 | 7690 | 5770 | 4230 |
| | | Pe | | | | | | | | 16.43 | 15.02 | 13.64 | 12.30 | 11.00 | 9.76 | 8.57 | 7.44 | 6.40 | 5.40 |
| | 40 | Qo | | | | | | | | 30600 | 26350 | 22350 | 18610 | 15230 | 12240 | 9640 | 7420 | 5540 | |
| | | Pe | | | | | | | | 18.53 | 16.90 | 15.32 | 13.79 | 12.33 | 10.92 | 9.57 | 8.29 | 7.07 | |
| | 50 | Qo | | | | | | | | 29350 | 25200 | 21350 | 17810 | 14630 | 11800 | 9280 | | | |
| | | Pe | | | | | | | | 20.63 | 18.79 | 17.01 | 15.30 | 13.65 | 12.07 | 10.55 | | | |
| RFC6DS-25.2 | 30 | Qo | | | | | | | | 36200 | 31300 | 26600 | 22250 | 18220 | 14620 | 11480 | 8830 | 6630 | 4870 |
| | | Pe | | | | | | | | 18.84 | 17.27 | 15.71 | 14.16 | 12.65 | 11.19 | 9.80 | 8.49 | 7.29 | 6.20 |
| | 40 | Qo | | | | | | | | 34900 | 30100 | 25500 | 21300 | 17420 | 14000 | 11040 | 8500 | 6350 | |
| | | Pe | | | | | | | | 21.27 | 19.40 | 17.60 | 15.85 | 14.16 | 12.55 | 11.00 | 9.52 | 8.13 | |
| | 50 | Qo | | | | | | | | 33450 | 28750 | 24350 | 20350 | 16720 | 13490 | 10620 | | | |
| | | Pe | | | | | | | | 23.71 | 21.58 | 19.35 | 17.56 | 15.67 | 13.85 | 12.10 | | | |
| RFC6DS-30.2 | 30 | Qo | | | | | | | | 43400 | 37400 | 31750 | 26500 | 21700 | 17420 | 13690 | 10540 | 7920 | 5800 |
| | | Pe | | | | | | | | 22.53 | 20.65 | 18.78 | 16.94 | 15.15 | 13.42 | 11.77 | 10.20 | 8.74 | 7.40 |
| | 40 | Qo | | | | | | | | 41500 | 35700 | 30300 | 25300 | 20700 | 16680 | 13170 | 10150 | 7590 | |
| | | Pe | | | | | | | | 25.20 | 23.10 | 21.01 | 18.96 | 16.95 | 15.00 | 13.14 | 11.37 | 9.72 | |
| | 50 | Qo | | | | | | | | 39500 | 34000 | 28850 | 24100 | 19870 | 16060 | 12650 | | | |
| | | Pe | | | | | | | | 28.07 | 25.69 | 23.33 | 21.01 | 18.75 | 16.57 | 14.49 | | | |

参数基于吸气温度20℃，50Hz，液体无过冷。Suction gas temperature 20℃, 50Hz, without liquid subcooling.

附加冷却或限制吸气温度。Additional cooling or limited suction gas temperature.

附加冷却和喷液冷却系统。Additional cooling &liquid injection cooling system.

# TECHNICAL DATA
## 技术数据

| 压缩机型号 Compressor Model | 电机名义功率 Nominal Motor-Power Hp/kW | 排气量 Displacement $m^3/h$ 50/60Hz | 缸数x直径x行程 Number Of Cylinder x Diameter x Stoke mm | 吸、排气阀接管 Suction, Discharge Line mm | | 油注入量 Oil Volume L | 电源 Power Supply V/Ph/Hz | 电气参数 Electrical Parameter | | 曲轴箱加热器 Crankcase Heater (220v) W | 供油方式 Oil Supply Method | 重量 Weight kg |
|---|---|---|---|---|---|---|---|---|---|---|---|---|
| | | | | DL Discharge Valve | SL Suction Valve | | | 最大工作电流(A) Max Operating Current | 启动、堵转电流(A) Starting/ Locked Current | | | |
| RFC4D-3.2 | 3/2.2 | 18.1/21.8 | 4×Φ41×39.3 | Φ16 | Φ22 | 2 | 220-240△/380-420Y/3/50 265-290△/440-480Y/3/60 | 15.9/9.2 | 76.6/44.2 | 120 | 离心润滑 Centrifugal lubrication | 82 |
| RFC4G-5.2 | 5/3.7 | 18.1/21.8 | 4×Φ41×39.3 | Φ16 | Φ22 | 2 | | 18.7/10.8 | 107.7/62.2 | 120 | | 86 |
| RFC4D-4.2 | 4/3 | 22.7/27.4 | 4×Φ46×39.3 | Φ22 | Φ28 | 2 | | 18.5/10.7 | 92.7/53.2 | 120 | | 84 |
| RFC4G-6.2 | 6/4.4 | 22.7/27.4 | 4×Φ46×39.3 | Φ22 | Φ28 | 2 | | 22.9/13.2 | 107.7/62.2 | 120 | | 86 |
| RFC4D-5.2 | 5/3.7 | 26.8/32.4 | 4×Φ50×39.3 | Φ22 | Φ28 | 2 | | 23.4/13.5 | 107.7/62.2 | 120 | | 85.5 |
| RFC4G-7.2 | 7/5.1 | 26.8/32.4 | 4×Φ50×39.3 | Φ22 | Φ28 | 2 | | 27.5/15.9 | 142.8/82.4 | 120 | | 88.5 |
| RFC4D-6.2 | 6/4.4 | 32.5/39.2 | 4×Φ55×39.3 | Φ22 | Φ28 | 2 | | 27.5/15.9 | 142.8/82.4 | 120 | | 90.5 |
| RFC4G-9.2 | 9/6.6 | 32.5/39.2 | 4×Φ55×39.3 | Φ22 | Φ28 | 2 | | 34.5/20 | 142.8/82.4 | 120 | | 90.5 |
| RFC4D-8.2 | 8/5.5 | 41.3/49.9 | 4×Φ60×42 | Φ28 | Φ35 | 2.6 | 380-420YY/3/50 440-480YY/3/60 | 17 | 49/81 | 120 | | 134 |
| RFC4G-12.2 | 12/8.8 | 41.3/49.9 | 4×Φ60×42 | Φ28 | Φ35 | 2.6 | | 24 | 69/113 | 140 | | 141 |
| RFC4D-10.2 | 10/7.5 | 48.5/58.5 | 4×Φ65×42 | Φ28 | Φ35 | 2.6 | | 21 | 59/99 | 140 | | 139 |
| RFC4G-15.2 | 15/10.5 | 48.5/58.5 | 4×Φ65×42 | Φ28 | Φ35 | 2.6 | | 31 | 81/132 | 140 | | 147 |
| RFC4D-12.2 | 12/8.8 | 56.2/67.9 | 4×Φ70×42 | Φ28 | Φ35 | 2.6 | | 24 | 69/113 | 140 | | 141 |
| RFC4G-20.2 | 20/15 | 56.2/67.9 | 4×Φ70×42 | Φ28 | Φ42 | 2.6 | | 37 | 97/158 | 140 | | 150 |
| RFC4D-15.2 | 15/10.5 | 73.6/88.8 | 4×Φ70×55 | Φ28 | Φ42 | 4 | | 31 | 81/132 | 140 | | 183 |





TECHNICAL DATA
技术数据

| 压缩机型号 Compressor Model | 电机名义功率 Nominal Motor-Power Hp/kW | 排气量 Displacement $m^3/h$ 50/60Hz | 缸数x直径x行程 Number Of Cylinder x Diameter x Stoke mm | 吸、排气阀接管 Suction, Discharge Line mm | | 油注入量 Oil Volume L | 电源 Power Supply V/Ph/Hz | 电气参数 Electrical Parameter | | 曲轴箱加热器 Crankcase Heater (220v) W | 供油方式 Oil Supply Method | 重量 Weight kg |
|---|---|---|---|---|---|---|---|---|---|---|---|---|
| | | | | DL Discharge Valve | SL Suction Valve | | | 最大工作电流(A) Max Operating Current | 启动、堵转电流(A) Starting/ Locked Current | | | |
| RFC4G-25.2 | 25/18.5 | 73.6/88.8 | 4×Φ70×55 | Φ28 | Φ54 | 4.5 | 380-420YY/3/50 440-480YY/3/60 | 45 | 116/193 | 140 | 油泵供油 Forced-lubrication | 203 |
| RFC4G-20.2 | 20/15 | 84.5/101.9 | 4×Φ75×55 | Φ28 | Φ54 | 4.5 | | 37 | 97/158 | 140 | | 192 |
| RFC4G-30.2 | 30/22 | 84.5/101.9 | 4×Φ75×55 | Φ28 | Φ54 | 4.5 | | 53 | 135/220 | 140 | | 206 |
| RFC6D-25.2 | 25/18.5 | 110.5/133.4 | 6×Φ70×55 | Φ35 | Φ54 | 4.75 | | 45 | 116/193 | 140 | | 224 |
| RFC6G-35.2 | 35/25.5 | 110.5/133.4 | 6×Φ70×55 | Φ42 | Φ54 | 4.75 | | 61 | 147/262 | 140 | | 235 |
| RFC6D-30.2 | 30/22 | 126.8/153.0 | 6×Φ75×55 | Φ35 | Φ54 | 4.75 | | 53 | 135/220 | 140 | | 228 |
| RFC6G-40.2 | 40/30 | 126.8/153.0 | 6×Φ75×55 | Φ42 | Φ54 | 4.75 | | 78 | 180/323 | 140 | | 238 |
| RFC6D-40.2 | 40/30 | 151.6/183.0 | 6×Φ82×55 | Φ42 | Φ54 | 4.75 | | 78 | 180/323 | 140 | | 239 |
| RFC6G-50.2 | 50/37 | 151.6/183.0 | 6×Φ82×55 | Φ42 | Φ54 | 4.75 | | 92 | 226/404 | 140 | | 241 |
| RFC6DS-20.2 | 20/15 | 73.6/36.9<br>88.8/44.5 | 6×Φ70/70×55 | Φ35 | Φ42 | 4.75 | | 37 | 97/158 | 140 | | 220 |
| RFC6DS-25.2 | 25/18.5 | 84.5/42.3<br>101.9/51.1 | 6×Φ75/75×55 | Φ35 | Φ42 | 4.75 | | 45 | 116/193 | 140 | | 233 |
| RFC6DS-30.2 | 30/22 | 101.1/50.5<br>122.0/60.9 | 6×Φ82/82×55 | Φ35 | Φ42 | 4.75 | | 53 | 135/220 | 140 | | 234 |

## 缩机

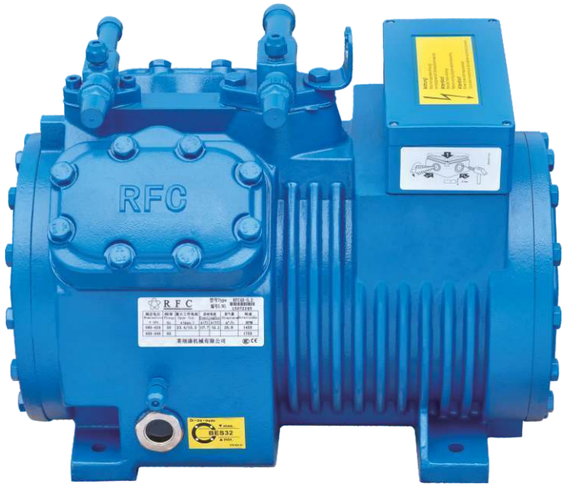


## 压缩外形图

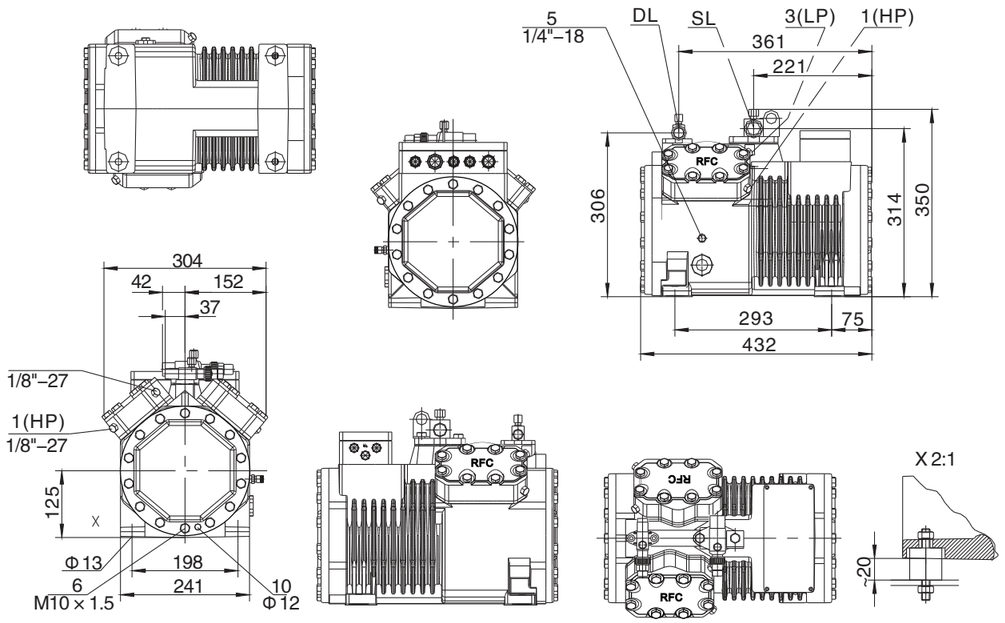




半封闭活塞式制冷压缩机
SEMI-HERMETIC RECIPROCATING COMPRESSOR

## 缩机

## 压缩外形图

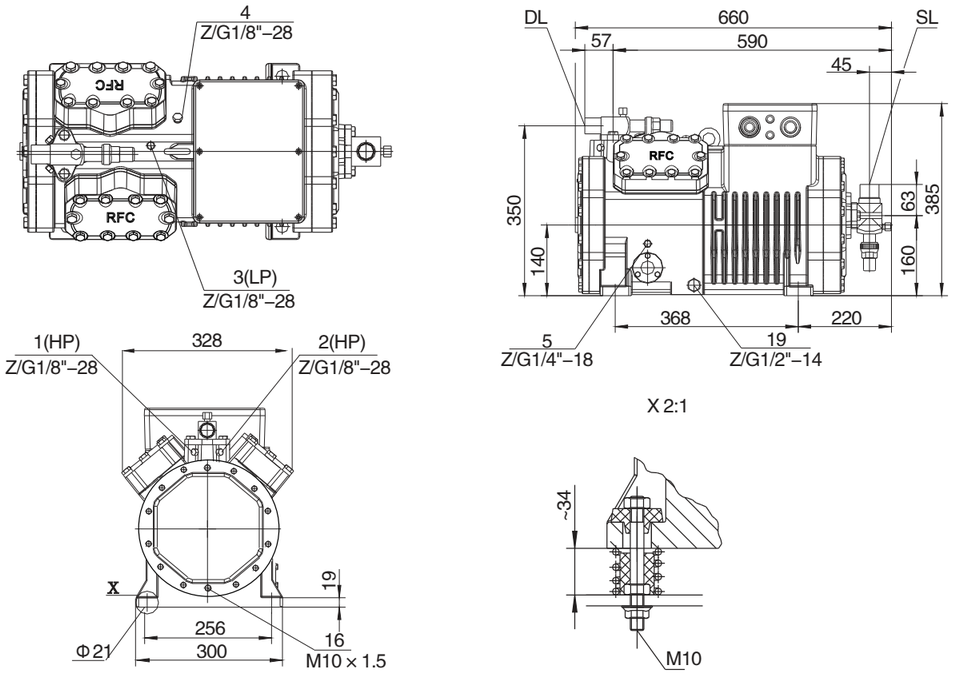

## 缩机

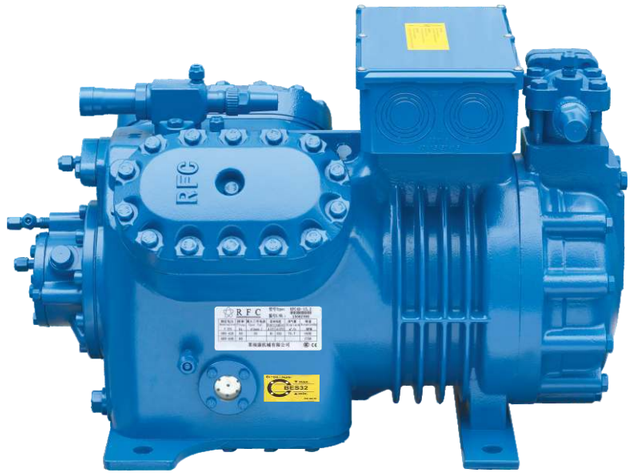

## 压缩外形图

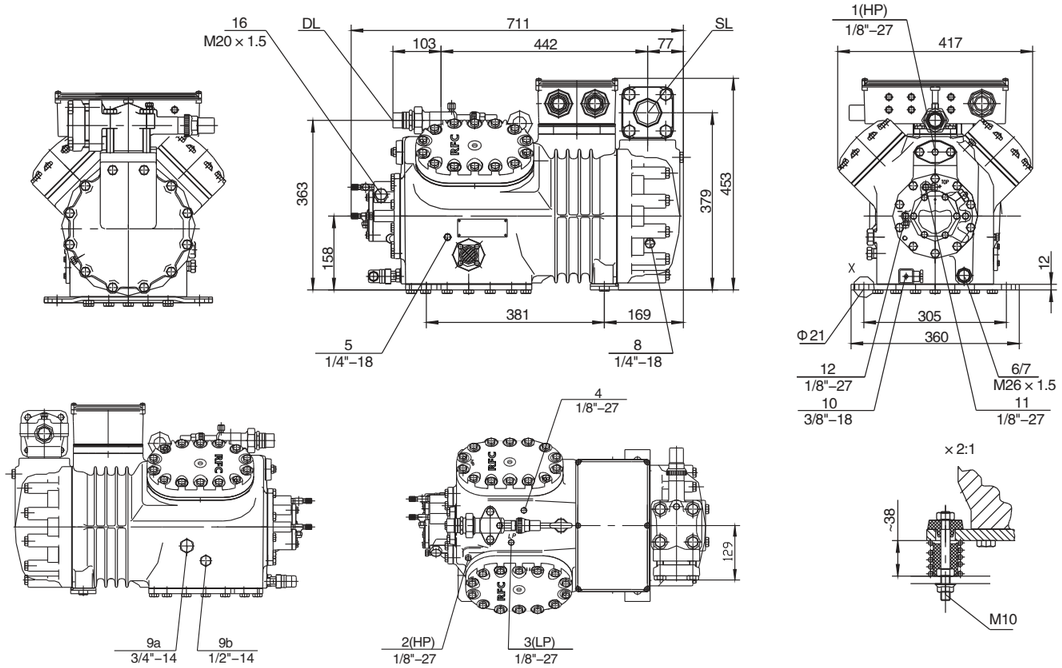




半封闭活塞式制冷压缩机
SEMI-HERMETIC RECIPROCATING COMPRESSOR

## 缩机

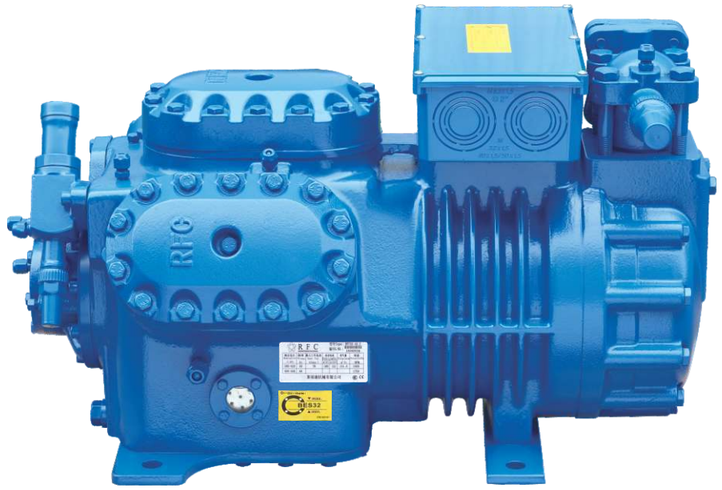

## 压缩外形图

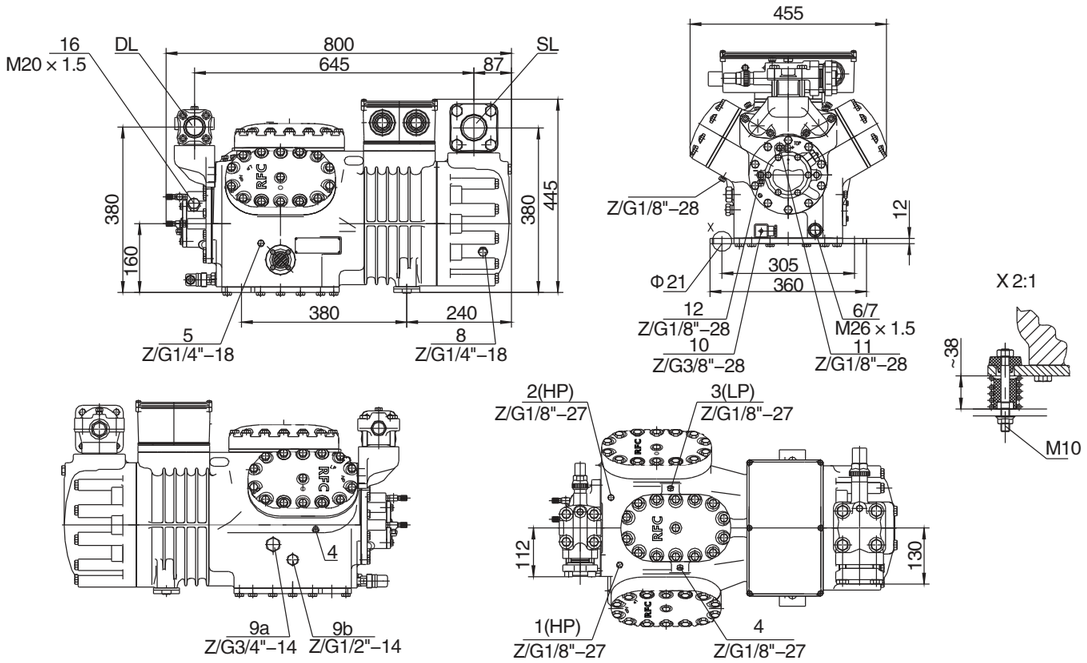

## 双级压缩机

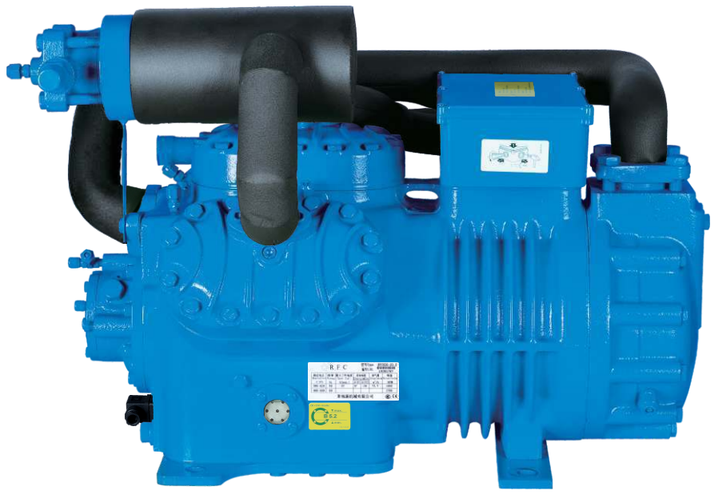

## 6DS-20.2 6DS-30.2双级压缩机外形图

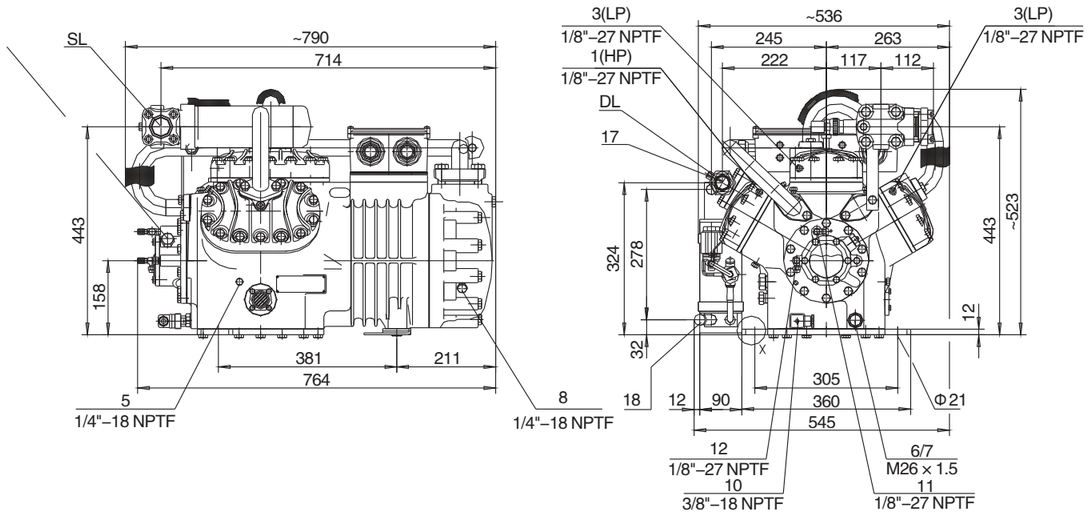


Peter Wong
Managing Director & Shareholder
Hangzhou DM Group
Hangzhou DM power transmission Co.,LTD
Hangzhou DM Compressor Co.,LTD
peter@dumax-group.com
http://dumax-group.com/

Sam Chan
Sales Director & Shareholder
Hangzhou DM Group
Hangzhou DM power transmission Co.,LTD
Hangzhou DM Compressor Co.,LTD
sam@dumax-group.com
http://dumax-group.com/

# Reciprocating Compressor

Copyright © 2021 Hangzhou Dumax (DM) Group All Rights Reserved