www.snowman.cn/en

Version Number: C-RC08-EN-V1.0

雪人集团 SNOWMAN GROUP 25TH

Official LinkedIn

Sales Network

FUJIAN SNOWMAN GROUP CO., LTD.

Address: Dongjiang West Road, Minjiangkou Industrial District Fujian, China.

Tel: +86 (591) 2870 1111

Fax: +86 (591) 2870 9222

E-mail: info@snowman.cn

www.snowman.cn/en

Snowman Group reserves the right to change its products without notice in advance.
The technical parameters shall be subject to order contract or technical appendix of the contract.

RefComp

Reciprocating Compressor

SPC Series Semi-hermetic Reciprocating Compressor



Global Service Hotline
400-109-6660

CONTENT

Description	Page
Structural Diagram	01
Model Description	03
Technical Parameters	04
Application Range	04
Product Features	05
Supply Scope	05
Performance Parameters	06
Dimension Diagram	09

Structural Diagram of Refcomp SPC Series Semi-hermetic Reciprocating Compressor

The SPC series reciprocating compressor is developed for low-temperature and air conditioning applications, with a power range of 5~10HP and a discharge capacity range of 19.3~33.1 m³/h (@50Hz), widely used in commercial ice making, supermarket refrigeration, and other similar fields.

Cooling capacity control

- Control the solenoid valve to alter the cooling capacity based on different conditions including full load and partial load.
- The cooling capacity adjustment is 50% for a 4-cylinder machine, meeting the system's cooling demand.



Compressor body

- Designed pressure of 30 bar.
- Low-pressure drop intake path design results in low intake minimizes intake resistance while ensuring adequate cooling of the motor.
- The central straight-through air channel design reduces losses along the way. Minimal throttling losses in the exhaust process, leading to lower energy consumption.
- Flexible configuration meets the installing needs of various water cooling, wind cooling and heat pump units.
- Compact design together with components including highly integrated filter, stop valve, temperature sensors and oil balance device guarantee the stability of the oil system and reliability of the equipment.



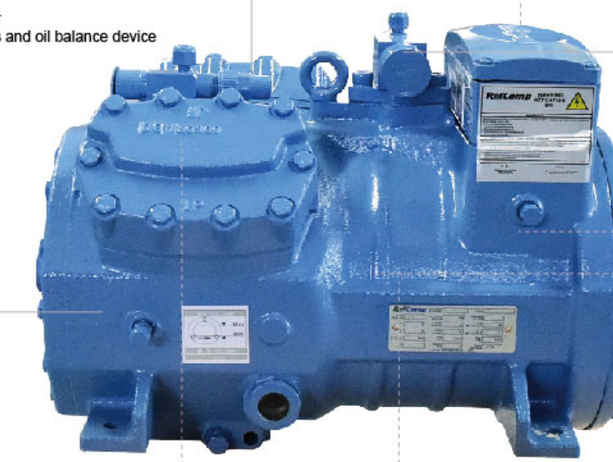



Transmission mechanism

- Equipped with the crankshafts developed by Refcomp, ensuring stable operation and good lubrication.
- The new launched technology features high efficiency, high strength, low noise and low vibe, reaching the top level among similar machine.
- Optimized design promotes compressing efficiency.
- The connecting rod pistons are linked by connecting rods, equipped with wear-resistant bushings inside, which can extend the service life.

Motor protection

- Equipped with INT69B2 motor protection and 6 series-connected PTC thermistor.
- Dynamic monitoring and tracking of systematic information, ensuring predictable alerts and safety protection.



Shut-off valve

- Suction and discharge valve can be rotated, easy to install with compact and flexible design.



Suction filter

- The internal delicate suction filter effectively filters out impurities from the refrigerant gases thus protects the motor.
- Located at the utmost end of the motor with compact structure and easy replacement.



Bearings

- The combination of slide bearings, thrust washers ensures high load capacity, high precision, extreme wear resistance and low noise, reducing the axial and radial wear to extend the product service life.
- High wear resistant component and good lubrication are designed for a lifespan of 50,000-80,000 hours.



Motor

- Designed with 400V-Y, 230V-Δ direct start motor, offering small starting current.
- Equipped with variable frequency motors, vector control can be achieved.
- With customized materials, the motor is compatible with various refrigerants including R22, R407C, R134a, R404A and R507A.
- Special structural design and spatial layout together with suction components ensure effective cooling and suction superheat.



Model Description

Compressor	SPC	4	-	19	L
	SPC	4	-	19	H

Series	
SPC	semi-hermetic reciprocating compressor

Cylinder	
4	cylinder

Separator	
-	Number separator

Theoretical discharge capacity (@50Hz)	
19	19/23/27/33 m³/h

Type of motor	
H	High temperature compressor
L	Low temperature compressor

Technical parameters

Model		SPC4							
		19L	19H	23L	23H	27L	27H	33L	33H
Nominal power	HP/kW	5/3.7	6/4.4	5/3.7	6/4.4	6/4.4	8/5.9	8/5.9	10/7.4
Displacement 50/60Hz	m³/hr	19.3/23.2	19.3/23.2	23.1/27.7	23.1/27.7	27.3/32.8	27.3/32.8	33.1/39.7	33.1/39.7
Compressor cylinder number		4							
Weight	kg	78	79	78	79	79	85	84	87
Oil charge	dm³	1.5							
Crankshaft heater electrical parameters		230V-120W-PTC-50/60Hz							
Discharge port	mm/inch	19-3/4"	19-3/4"	22-7/8"	22-7/8"	22-7/8"	22-7/8"	28-1 1/8"	28-1 1/8"
Suction port	mm/inch	28-1 1/8"	28-1 1/8"	28-1 1/8"	28-1 1/8"	28-1 1/8"	28-1 1/8"	35-1 3/8"	35-1 3/8"
Capacity regulation		100,50%							
Standard motor electrical parameters		400V/3/50Hz-Y(230V/3/50Hz-D)							
Starting current Y/D	A	54/94	60/104	54/94	60/104	60/104	85/148	85/148	108/188
Maximum operating current Y/D	A	12/21	14/24	12/21	14/24	14/24	16/28	16/28	24/42

Application Range

SPC Series: R404A-R507A application range

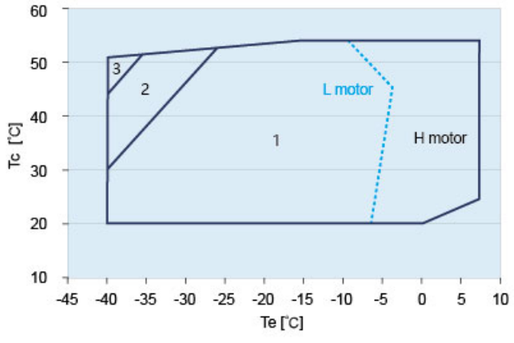

SPC Series: R407A application range

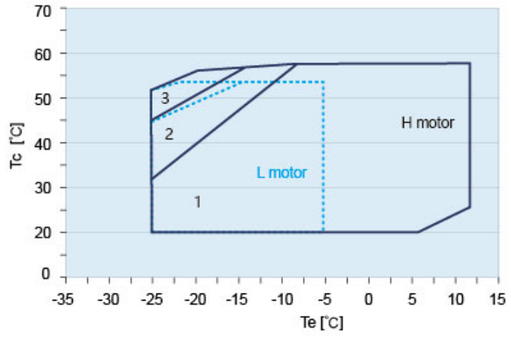

Application range of full load operating
1=standard application range
2=additional cooling application range
3= application range requiring additional cooling + maximum [20°C] suction superheat.

Product Features

- High temperature compressor(H) and low temperature compressor(L) are available according to different needs.
- Be compatible with various refrigerants including R407C, R134a and R507A meeting different refrigeration needs.
- Compact design, highly integrated components of filter, stop valve and temperature sensors together with oil balance device ensure the stable oil system and reliable equipment.
- Low noise, high efficiency and flexible configuration meets the installing needs of various water cooling, wind cooling and heat pump units.

Product Supply

Standard accessories

- SPC star connected motor (400V/3/50Hz) or delta connected motor (230V/3/50Hz).
- Crankcase heater.
- Discharge shut-off valve.
- Suction shut-off valve.
- Rubber vibration damper.
- Direct on-line (DOL).
- Oil sight glass.
- Oil charging.
- PTC protective thermistor.
- INT69B2 protection module (230V/1/50 or 60Hz).
- IP54 terminal box.

Optional Accessories:

- SPC star or delta connected motor (380V/3/60Hz) or (220V/3/60Hz).
- Photoelectric oil level switch assembly.
- CR capacity regulation assembly.
- Fan assembly.
- Discharge temperature probe assembly.
- Special packaging.

The standard electrical specification for the compressor's electronic accessories (electronic protection module, crankcase heater, CR solenoid valve coil) is 230V AC 50/60Hz. For special electrical specification accessories, please consult RefComp.

Performance parameters (refrigerant R134a)

SPC4-19L					
Tc	30	35	40	45	50
Te	Pf	Pf	Pf	Pf	Pf
-30.0	2.2	1.9	1.7	1.4	1.2
-25.0	3.1	2.8	2.5	2.2	1.9
-20.0	4.2	3.8	3.5	3.1	2.8
-15.0	5.5	5.1	4.7	4.2	3.8
-10.0	7.2	6.7	6.1	5.6	5.1
-5.0	9.2	8.5	7.9	7.3	6.7
0.0	11.5	10.8	10.1	9.3	8.5
5.0	14.4	13.5	12.6	11.7	10.8

SPC4-19H					
Tc	30	35	40	45	50
Te	Pf	Pf	Pf	Pf	Pf
-20.0	4	3.7	3.3	3	2.7
-15.0	5.3	4.9	4.5	4.1	3.7
-10.0	6.9	6.4	5.9	5.4	4.9
-5.0	8.8	8.2	7.6	7	6.4
0.0	11	10.3	9.6	8.9	8.2
5.0	13.7	12.9	12	11.2	10.3
10.0	16.9	15.9	14.8	13.8	12.8
12.0	18.3	17.2	16.1	15	13.9

SPC4-23L					
Tc	30	35	40	45	50
Te	Pf	Pf	Pf	Pf	Pf
-30.0	2.8	2.5	2.2	2	1.7
-25.0	3.8	3.5	3.1	2.8	2.5
-20.0	5.1	4.7	4.3	3.9	3.5
-15.0	6.6	6.1	5.6	5.1	4.6
-10.0	8.4	7.8	7.2	6.7	6.1
-5.0	10.7	9.9	9.2	8.6	7.9
0.0	13.3	12.5	11.6	10.8	10
5.0	16.4	15.5	14.5	13.6	12.6

SPC4-23H					
Tc	30	35	40	45	50
Te	Pf	Pf	Pf	Pf	Pf
-20.0	4.8	4.4	4	3.7	3.3
-15.0	6.4	6	5.5	5	4.6
-10.0	8.3	7.8	7.2	6.6	6.1
-5.0	10.6	9.9	9.2	8.5	7.8
0.0	13.3	12.4	11.6	10.8	9.9
5.0	16.5	15.4	14.4	13.4	12.4
10.0	20.2	19	17.8	16.6	15.4
12.0	21.9	20.6	19.3	18	16.7

SPC4-27L					
Tc	30	35	40	45	50
Te	Pf	Pf	Pf	Pf	Pf
-30.0	3.4	3	2.7	2.3	2
-25.0	4.5	4	3.6	3.2	2.8
-20.0	5.8	5.3	4.9	4.4	3.9
-15.0	7.6	7	6.4	5.9	5.3
-10.0	9.7	9	8.4	7.7	7
-5.0	12.3	11.5	10.7	9.9	9.1
0.0	15.3	14.4	13.4	12.4	11.5
5.0	18.8	17.7	16.6	15.5	14.3

SPC4-27H					
Tc	30	35	40	45	50
Te	Pf	Pf	Pf	Pf	Pf
-20.0	5.8	5.4	4.9	4.4	4
-15.0	7.6	7	6.5	5.9	5.3
-10.0	9.7	9	8.4	7.7	7
-5.0	12.3	11.5	10.7	9.9	9
0.0	15.3	14.4	13.4	12.4	11.5
5.0	18.9	17.8	16.7	15.5	14.3
10.0	23.1	21.8	20.4	19.1	17.7
12.0	24.9	23.5	22.1	20.6	19.2

SPC4-33L					
Tc	30	35	40	45	50
Te	Pf	Pf	Pf	Pf	Pf
-30.0	3.9	3.5	3.1	2.7	2.4
-25.0	5.3	4.8	4.4	3.9	3.5
-20.0	7.1	6.5	5.9	5.4	4.8
-15.0	9.2	8.5	7.8	7.1	6.5
-10.0	11.8	10.9	10.1	9.3	8.5
-5.0	14.9	13.9	12.9	11.9	11
0.0	18.5	17.4	16.2	15.1	14
5.0	22.8	21.5	20.1	18.8	17.5

SPC4-33H					
Tc	30	35	40	45	50
Te	Pf	Pf	Pf	Pf	Pf
-20.0	7.2	6.7	6.2	5.7	5.2
-15.0	9.4	8.8	8.2	7.6	7
-10.0	12.1	11.3	10.5	9.8	9.1
-5.0	15.2	14.2	13.3	12.4	11.5
0.0	18.9	17.7	16.6	15.5	14.4
5.0	23.1	21.7	20.4	19	17.7
10.0	28.1	26.4	24.8	23.2	21.6
12.0	30.3	28.5	26.8	25.1	23.4

Key:
Pf = cooling capacity (kW)
Te = evaporating temperature (℃)
Tc = condensing temperature (℃)
For performance data under different working conditions, please refer to the RefComp selection software.

Performance Parameters (refrigerant R507A)

SPC4-19L					
Tc	30	35	40	45	50
Te	Pf	Pf	Pf	Pf	Pf
-40.0	2.8	2.5	2.1	1.8	1.5
-35.0	3.8	3.4	3	2.6	2.2
-30.0	5	4.5	4	3.5	3
-25.0	6.5	5.9	5.3	4.7	4.1
-20.0	8.3	7.6	6.8	6.1	5.3
-15.0	10.5	9.6	8.7	7.8	6.8
-10.0	13.1	12.1	11	9.8	8.7
-5.0	-	14.9	13.6	12.3	-

SPC4-19H					
Tc	30	35	40	45	50
Te	Pf	Pf	Pf	Pf	Pf
-30.0	4.6	4	3.5	3	2.6
-25.0	6.2	5.5	4.8	4.2	3.6
-20.0	8.1	7.3	6.5	5.7	4.9
-15.0	10.4	9.5	8.5	7.5	6.6
-10.0	13.1	12	10.8	9.6	8.5
-5.0	16.1	14.8	13.4	12.1	10.7
0.0	19.6	18	16.4	14.8	13.2
5.0	23.4	21.6	19.8	17.9	16

SPC4-23L					
Tc	30	35	40	45	50
Te	Pf	Pf	Pf	Pf	Pf
-40.0	3	2.6	2.3	1.9	1.5
-35.0	4.3	3.8	3.3	2.8	2.3
-30.0	5.8	5.2	4.6	4	3.4
-25.0	7.6	6.8	6.1	5.4	4.6
-20.0	9.8	8.8	7.9	7	6.2
-15.0	12.3	11.2	10.1	9	8
-10.0	15.3	14	12.6	11.4	10.1
-5.0	-	17.1	15.6	14.1	-

SPC4-23H					
Tc	30	35	40	45	50
Te	Pf	Pf	Pf	Pf	Pf
-30.0	5.7	5.1	4.5	3.9	3.3
-25.0	7.5	6.8	6	5.3	4.6
-20.0	9.8	8.9	8	7.1	6.2
-15.0	12.4	11.3	10.2	9.1	8
-10.0	15.6	14.2	12.9	11.6	10.3
-5.0	19.2	17.7	16.1	14.5	12.9
0.0	23.5	21.6	19.7	17.8	16
5.0	28.3	26.1	23.9	21.7	19.5

SPC4-27L					
Tc	30	35	40	45	50
Te	Pf	Pf	Pf	Pf	Pf
-40.0	3.8	3.4	2.9	2.5	2.1
-35.0	5.3	4.8	4.2	3.7	3.1
-30.0	7.1	6.4	5.7	5	4.4
-25.0	9.3	8.4	7.6	6.7	5.9
-20.0	11.9	10.8	9.8	8.7	7.7
-15.0	15	13.7	12.4	11.1	9.8
-10.0	18.5	17	15.4	13.9	12.4
-5.0	-	20.8	19	17.2	-

SPC4-27H					
Tc	30	35	40	45	50
Te	Pf	Pf	Pf	Pf	Pf
-30.0	7.1	6.4	5.8	5.1	4.4
-25.0	9.3	8.5	7.7	6.8	6
-20.0	12	11	9.9	8.9	7.8
-15.0	15.1	13.9	12.6	11.3	10.1
-10.0	18.8	17.3	15.8	14.2	12.7
-5.0	23.1	21.3	19.4	17.6	15.8
0.0	28	25.9	23.7	21.6	19.4
5.0	33.7	31.2	28.7	26.2	23.7

SPC4-33L					
Tc	30	35	40	45	50
Te	Pf	Pf	Pf	Pf	Pf
-40.0	5	4.3	3.7	3.2	2.7
-35.0	6.6	5.8	5.1	4.4	3.8
-30.0	8.7	7.8	6.9	6	5.2
-25.0	11.4	10.2	9.1	8	7
-20.0	14.6	13.2	11.9	10.5	9.3
-15.0	18.4	16.8	15.2	13.6	12.1
-10.0	22.9	21	19.1	17.3	15.4
-5.0	-	26	23.8	21.6	-

SPC4-33H					
Tc	30	35	40	45	50
Te	Pf	Pf	Pf	Pf	Pf
-30.0	8.7	7.9	7	6.2	5.5
-25.0	11.4	10.3	9.2	8.2	7.3
-20.0	14.6	13.3	12	10.7	9.6
-15.0	18.4	16.8	15.2	13.7	12.3
-10.0	22.8	20.9	19.1	17.2	15.5
-5.0	28	25.7	23.5	21.3	19.2
0.0	33.9	31.3	28.7	26.1	23.5
5.0	40.6	37.6	34.5	31.5	28.5

Key:

Pf = cooling capacity (kW)

Te = evaporating temperature (℃)

Tc = condensing temperature (℃)

For performance data under different working conditions, please refer to the RefComp selection software.

Performance Parameters (refrigerant R404A)

SPC4-19L					
Tc	30	35	40	45	50
Te	Pf	Pf	Pf	Pf	Pf
-40.0	2.7	2.4	2.1	1.8	1.5
-35.0	3.6	3.3	2.9	2.5	2.1
-30.0	4.8	4.4	3.9	3.4	2.9
-25.0	6.3	5.7	5.1	4.5	3.9
-20.0	8.1	7.4	6.7	5.9	5.2
-15.0	10.2	9.4	8.5	7.6	6.7
-10.0	12.7	11.7	10.7	9.6	8.5
-6.0	15.1	13.9	12.7	11.5	10.3

SPC4-19H					
Tc	30	35	40	45	50
Te	Pf	Pf	Pf	Pf	Pf
-30.0	4.6	4.2	3.8	3.3	2.9
-25.0	6	5.5	5	4.4	3.9
-20.0	7.7	7.1	6.5	5.8	5.2
-15.0	9.8	9	8.3	7.5	6.7
-10.0	12.2	11.3	10.4	9.4	8.5
-5.0	15	13.9	12.8	11.7	10.6
0.0	18.1	16.9	15.6	14.3	13
5.0	21.7	20.3	18.8	17.3	15.8

SPC4-23L					
Tc	30	35	40	45	50
Te	Pf	Pf	Pf	Pf	Pf
-40.0	3.2	2.8	2.5	2.1	1.8
-35.0	4.4	3.9	3.5	3	2.5
-30.0	5.8	5.3	4.7	4.1	3.5
-25.0	7.6	6.9	6.2	5.5	4.8
-20.0	9.7	8.9	8.0	7.2	6.3
-15.0	12.3	11.3	10.2	9.2	8.1
-10.0	15.3	14.1	12.9	11.6	10.3
-6.0	18.2	16.8	15.4	13.9	12.5

SPC4-23H					
Tc	30	35	40	45	50
Te	Pf	Pf	Pf	Pf	Pf
-30.0	5.5	4.9	4.3	3.8	3.2
-25.0	7.3	6.6	5.9	5.2	4.5
-20.0	9.4	8.6	7.7	6.9	6
-15.0	12	11	9.9	8.9	7.8
-10.0	15.1	13.8	12.5	11.3	10
-5.0	18.6	17.1	15.6	14.1	12.6
0.0	22.7	21	19.2	17.4	15.6
5.0	27.5	25.4	23.3	21.2	19.1

SPC4-27L					
Tc	30	35	40	45	50
Te	Pf	Pf	Pf	Pf	Pf
-40.0	3.8	3.4	2.9	2.5	2
-35.0	5.2	4.7	4.2	3.7	3.1
-30.0	6.8	6.2	5.6	4.9	4.3
-25.0	8.9	8	7.2	6.5	5.7
-20.0	11.4	10.3	9.3	8.3	7.4
-15.0	14.5	13.2	11.9	10.7	9.5
-10.0	18.4	16.7	15.2	13.7	12.2
-6.0	22.1	20.2	18.3	16.6	14.9

SPC4-27H					
Tc	30	35	40	45	50
Te	Pf	Pf	Pf	Pf	Pf
-30.0	6.9	6.2	5.6	4.9	4.3
-25.0	9	8.2	7.4	6.6	5.8
-20.0	11.6	10.6	9.6	8.6	7.6
-15.0	14.6	13.4	12.2	11	9.8
-10.0	18.2	16.8	15.3	13.9	12.4
-5.0	22.4	20.7	18.9	17.2	15.5
0.0	27.2	25.2	23.1	21.1	19
5.0	32.7	30.3	27.9	25.6	23.2

SPC4-33L					
Tc	30	35	40	45	50
Te	Pf	Pf	Pf	Pf	Pf
-40.0	5.2	4.4	3.7	3.2	3.1
-35.0	6.9	6.1	5.2	4.5	4.2
-30.0	9.1	8	7	6.1	5.6
-25.0	11.6	10.4	9.1	8	7.3
-20.0	14.7	13.2	11.7	10.3	9.3
-15.0	18.2	16.5	14.7	13.1	11.7
-10.0	22.4	20.4	18.3	16.3	14.5
-6.0	26.1	23.9	21.5	19.2	17.1

SPC4-33H					
Tc	30	35	40	45	50
Te	Pf	Pf	Pf	Pf	Pf
-30.0	8.4	7.6	6.8	6	5.2
-25.0	10.9	9.9	9	8	7
-20.0	14	12.8	11.6	10.4	9.2
-15.0	17.6	16.1	14.7	13.2	11.8
-10.0	21.9	20.1	18.4	16.6	14.9
-5.0	26.9	24.8	22.7	20.6	18.5
0.0	32.7	30.2	27.7	25.3	22.8
5.0	39.3	36.4	33.6	30.7	27.8

Key:

Pf = cooling capacity (kW)

Te = evaporating temperature (℃)

Tc = condensing temperature (℃)

For performance data under different working conditions, please refer to the RefComp selection software.

Dimension Diagram

SPC4-19L_SPC4-23L_SPC4-27L_SPC4-33L
SPC4-19H_SPC4-23H_SPC4-27H_SPC4-33H

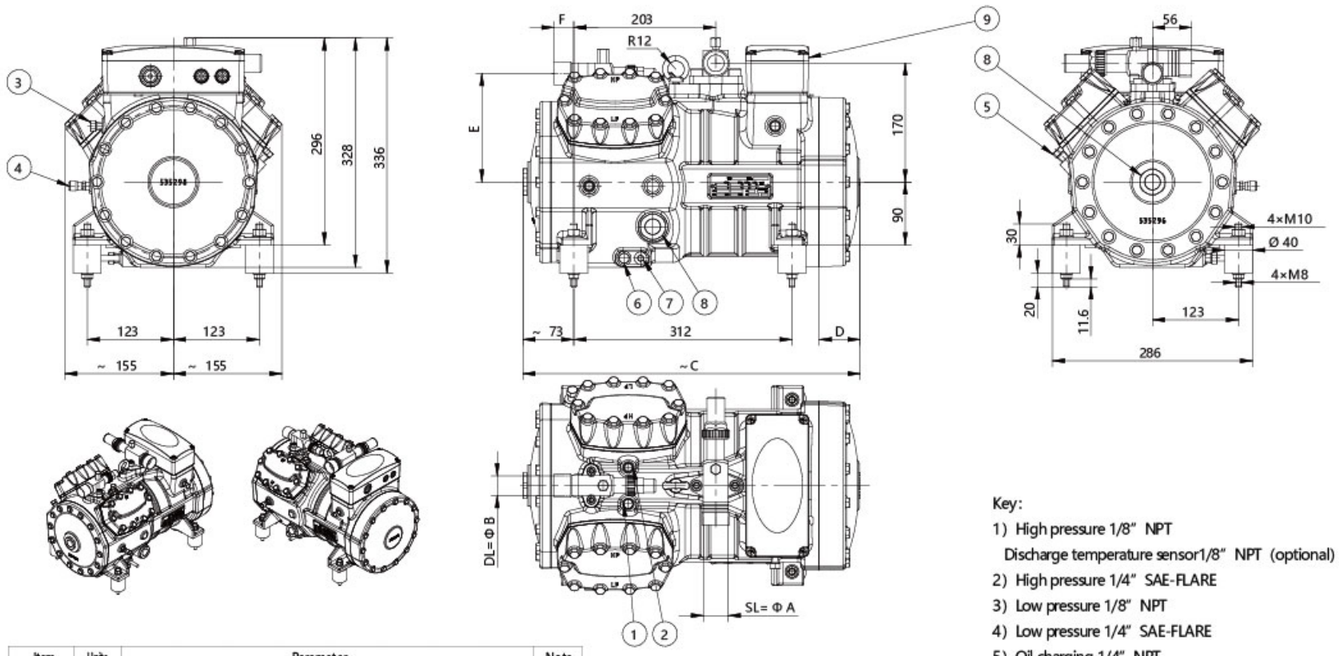

Item	Units	Parameter								Note
Type	/	SPC4-19L	SPC4-19H	SPC4-23L	SPC4-23H	SPC4-27L	SPC4-27H	SPC4-33L	SPC4-33H	
Dimensions	mm	452.5×310 ×336	452.5×310 ×336	452.5×310 ×336	452.5×310 ×336	452.5×310 ×336	482×310 ×336	482×310 ×336	482×310 ×336	
A/Size A	mm/inch	28.85/1 1/8"	28.85/1 1/8"	28.85/1 1/8"	28.85/1 1/8"	28.85/1 1/8"	28.85/1 1/8"	35.5/1 3/8"	35.5/1 3/8"	
B/Size B	mm/inch	19.35/ 3/4"	19.35/ 3/4"	22.45/7/8"	22.45/7/8"	22.45/ 7/8"	22.45/ 7/8"	28.85/1 1/8"	28.85/1 1/8"	
C/Size C	mm	452.5	452.5	452.5	452.5	452.5	482	482	482	
D/Size D	mm	29	29	29	29	29	58.5	58.5	58.5	
E/Size E	mm	149	149	149	149	149	149	155	155	
F/Size F	mm	10.5	10.5	17	17	17	17	28	28	

Key:

1) High pressure 1/8" NPT
   Discharge temperature sensor1/8" NPT (optional)
2) High pressure 1/4" SAE-FLARE
3) Low pressure 1/8" NPT
4) Low pressure 1/4" SAE-FLARE
5) Oil charging 1/4" NPT
6) Oil drain 1/4" NPT
7) Crankcase heater
8) Oil sight glass 1-1/8" -18UNEF
   Oil level sensor (optional)
9) Electrical box

SL) Suction shut-off value

DL) Discharge shut-off value