Technical Data Compressor

SECOP

Model

Designation	**SC21CL**	**220-240V/50Hz 1~**	Sales code:	**104L2322**

Compressor design

Oil type	Polyolester	Refrigerant(s)	**R404A, R452A, R507**
Oil viscosity	32,5cSt	Displacement	20,95cm³ / 1,28cu.in
Oil quantity	594cm³ / 20,1fl.oz	Compressors on pallet	80
Refr. charge - tech. limit	1300g / 45,9oz		
Free gas volume comp.	1410cm³ / 47,7fl.oz		
Weight	14,1kg / 31,1lbs		
Motor protection	1# internal		
Winding resistance main	3,4Ω (at 25°C)		
Winding resistance aux	14,4Ω (at 25°C)		
Max. winding temp.	125°C / 257°F		
Max. discharge temp.	130°C / 266°F		



General - Configurations with SC21CL

	Conf. 1	**Conf. 2**
Motorconfiguration	CSCR	CSCR
Power supply (nominal)	220-240V/50Hz	220-240V/50Hz
Number of phases	1	1
Voltage range	198-254V	198-254V
Approvals	VDE, CCC, EAC	VDE, CCC
Starting torque	HST	HST
Note	- / -	

Applications with SC21CL

	Conf. 1	**Conf. 2**
Refrigerant	R404A	R452A
Application	LBP	LBP
System cooling	fan 3m/s	fan 3m/s
Hot gas defrost	OK	OK
Long interval pull down	OK	OK

Electrical data - Configurations with SC21CL

	Conf. 1	**Conf. 2**
Starting device type	relay	relay
Run capacitor	10µF	10µF
Start capacitor	80µF	80µF
LRA (locked rotor amps / 4s)	23,4A	23,4A
RLA (rated load amps / 1s)	4,3A	4,3A
Cut in current	23,4A	23,4A
IP class	21	21

Model

Designation **SC21CL** **220-240V/50Hz 1~** Sales code: **104L2322**

Compressor dimensions

Housing	A Height	219mm / 8,62in
	B Height	213mm / 8,39in
	C Length shell	239mm / 9,41in
	D Length w. cover	255mm / 10,04in
	E Width	151mm / 5,94in

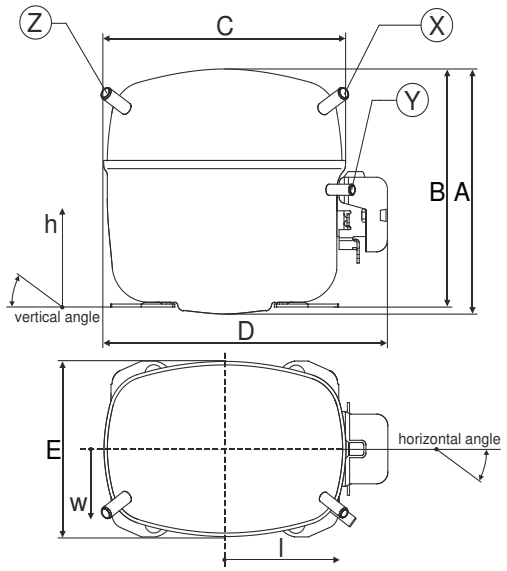

Connectors		**Suction** X	**Discharge** Y	**Process** Z
Diameter	[mm]	øi 10,11-10,29	øi 6,11-6,29	øi 6,11-6,29
(i:inside, o:outside)	[in]	øi 0,4-0,41	øi 0,24-0,25	øi 0,24-0,25
Material		copper	copper	copper
Horizontal angle	±2°	37°	37°	143°
Vertical angle	±2°	30°	0°	150°
Position l/h/w	[mm]	107/193/55	115/110/63	-107/193/55
	[in]	4,2/7,6/2,2	4,5/4,3/2,5	-4,2/7,6/2,2
Straight tube l.	[mm]	12	12	12
	[in]	0,5	0,5	0,5

Compressor fixation

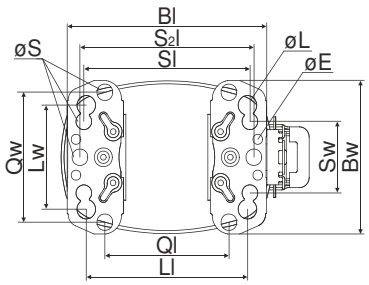

Baseplate	[mm]	[inch]
Bl	204	8.03
Bw	150	5.9
øE	ø 9.7	ø 0.38

Large holes	[mm]	[inch]
Ll	165	6.5
Lw	101.6	4
øL	ø 19	ø 0.75

Small holes	[mm]	[inch]
Sl	170	6.7
Sw	70	2.76
øS	ø 16	ø 0.63
Ql	127	5
Qw	127	5

Bolt joint

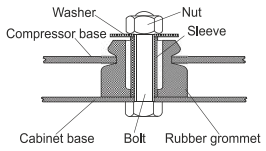

Snap-on

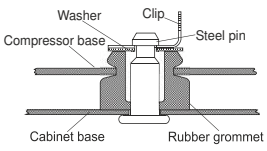

Mounting accessories	one comp.	multi pack
Bolt joint | M6 | ø16mm	118-1917	118-1918
Bolt joint | ø1/4" | ø16mm	118-1946	
Bolt joint | ø1/4" | ø19mm	118-1949	
Snap-on | ø7,3 | ø16mm	118-1947	118-1919

Model

Designation				
	SC21CL	**220-240V/50Hz**	**Conf. 1**	Sales code: **104L2322**

Configuration

Motorconfiguration	CSCR
Power supply (nominal)	220-240V/50Hz 1~
Refrigerant	R404A
Application	LBP
Voltage range	198-254V
Starting torque	HST
Approvals	VDE
	CCC
	EAC

Ambient temperatures / system cooling

Ambient temperature min.:	10°C / 50°F
Ambient temperature max.:	38°C / 101°F

System cooling (n/a: outside limits)			
T ambient	LBP	MBP	HBP
32°C / 90°F	fan 3m/s	n/a	n/a
38°C / 100°F	fan 3m/s	n/a	n/a
43°C / 110°F	n/a	n/a	n/a

Operation pressure range

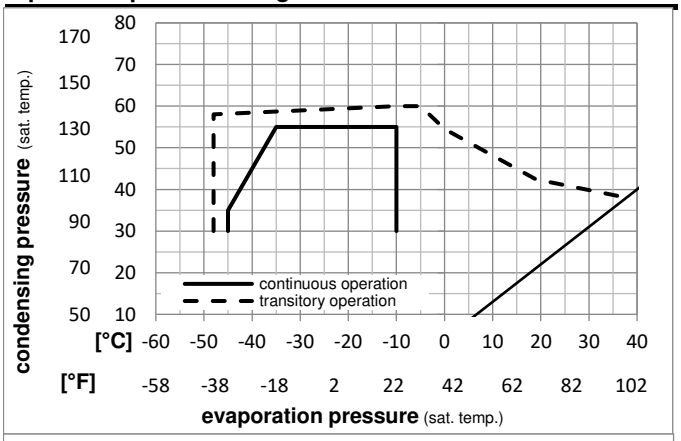

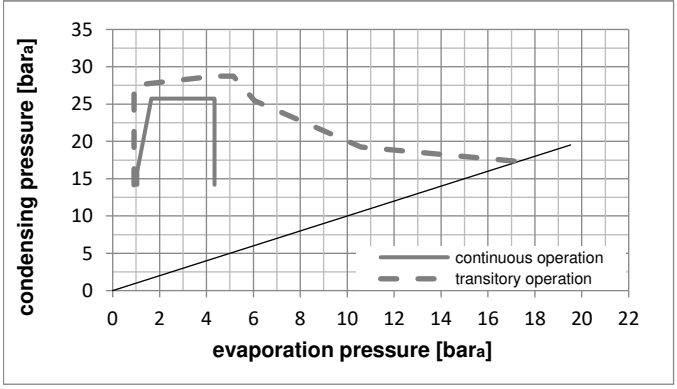

Electrical accessories / wiring diagram

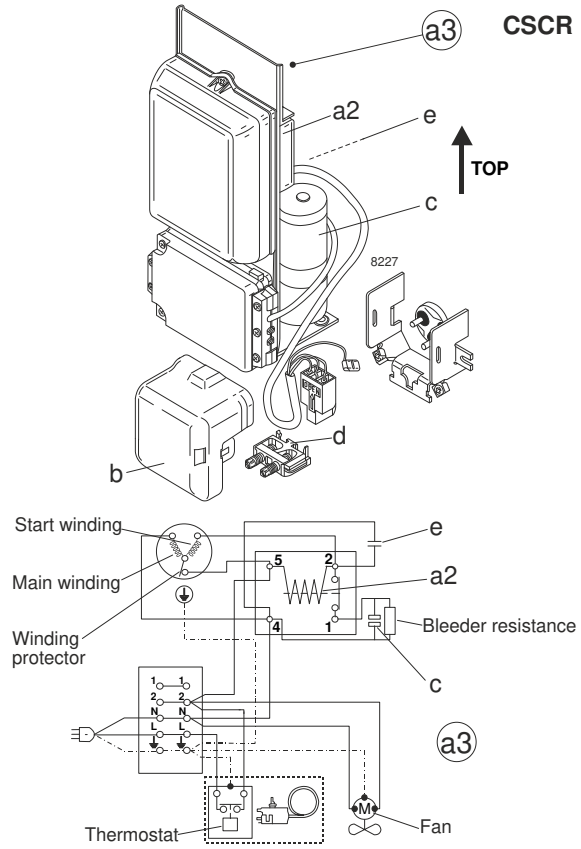

Components

a3	SC starter kit (550mm)	117-7027
b	plastic cover	103N2009
d	cord relief	103N1004

Alternative components

a3	SC starter kit (1000mm)	117-7040
a3	SC starter kit (650mm)	117-7046

Model

Designation **SC21CL** **220-240V/50Hz** **Conf. 1** Sales code: **104L2322**

Optimization + standard conditions 220V/50Hz, CSCR, fan 3m/s, VDE, CCC, EAC

	Evaporating pressure (saturation temperature)	Condensing pressure (saturation temperature)	Return gas temp.	Liquid temp.	Cooling capacity			COP	EER		Power consumption P1	Current consumption I	Ref. mass flow ṁ	
	pe	pc	RGT	Tliq	[W]	[Btu/h]	[kcal/h]	[W/W]	[Btu/Wh]	[kcal/Wh]	[W]	[A]	[kg/h]	
[°C]	-23,3	54,4	32,2	32,2	902,9	3084	777,1	1,18	4,02	1,01	767,3	4,02	21,04	**ASHRAE LBP**
[°F]	-10	130	90	90										
[°C]	-25	55	32	55	608,5	2078	523,6	0,83	2,82	0,71	735,9	3,86	19,02	**cecomaf LBP**
[°F]	-13	131	89,6	131										
[°C]	-35	40	20	40	509,0	1738	438,1	0,98	3,34	0,84	521,1	2,95	13,83	**EN12900 LBP**
[°F]	-31	104	68	104										
[°C]	-23,3	48,9	4,44	48,9	685,6	2341	590,0	0,91	3,12	0,79	749,7	3,91	24,27	**ARI540 LBP**
[°F]	-10	120	40	120										
[°C]	-23,3	40,6	32,2	32,2	1091,0	3726	938,9	1,53	5,23	1,32	711,9	3,80	25,42	**AHAM LBP**
[°F]	-10	105	90	90										
[°C]	-35	45	32	45	455,0	1554	391,6	0,85	2,91	0,73	534,2	2,94	12,16	**opt**
[°F]	-31	113	89,6	113										

Performance tables 220V/50Hz, CSCR, fan 3m/s, VDE, CCC, EAC

	pe		Cooling capacity			COP	EER		P1	I	m
	[°C]	[°F]	[W]	[Btu/h]	[kcal/h]	[W/W]	[Btu/Wh]	[kcal/Wh]	[W]	[A]	[kg/h]
[°C / °F]	-45	-49	225,9	772	194,4	0,57	1,93	0,49	399,6	2,40	6,00
cond. pressure	-35	-31	455,0	1554	391,6	0,85	2,91	0,73	534,2	2,94	12,16
pc= 45/113	-30	-22	617,4	2108	531,3	1,00	3,43	0,86	614,8	3,31	16,57
return gas temp.	-25	-13	812,8	2776	699,5	1,16	3,95	1,00	702,1	3,71	21,92
RGT= 32/90	-20	-4	1042,1	3559	896,9	1,31	4,48	1,13	794,7	4,14	28,27
liquid temp	-15	5	1306,3	4461	1124,2	1,47	5,01	1,26	890,8	4,58	35,68
Tliq= 45/113	-10	14	1606,3	5486	1382,4	1,62	5,55	1,40	989,0	5,00	44,23
[°C / °F]	-45	-49	174,5	596	150,1	0,44	1,49	0,37	401,0	2,29	5,36
cond. pressure	-35	-31	327,7	1119	282,0	0,59	2,02	0,51	553,1	2,94	10,14
pc= 55/131	-30	-22	451,7	1543	388,7	0,70	2,40	0,61	641,4	3,38	14,04
return gas temp	-25	-13	608,5	2078	523,6	0,83	2,82	0,71	735,9	3,86	19,02
RGT= 32/90	-20	-4	798,9	2728	687,5	0,96	3,27	0,82	834,8	4,37	25,14
liquid temp	-15	5	1023,9	3497	881,2	1,09	3,73	0,94	936,7	4,89	32,47
Tliq= 55/131	-10	14	1284,4	4386	1105,4	1,23	4,22	1,06	1040,1	5,41	41,12

Model

Designation				
	SC21CL	**220-240V/50Hz**	**Conf. 2**	Sales code: **104L2322**

Configuration

Motorconfiguration	CSCR
Power supply (nominal)	220-240V/50Hz 1~
Refrigerant	R452A
Application	LBP
Voltage range	198-254V
Starting torque	HST
Approvals	VDE
	CCC

Ambient temperatures / system cooling

Ambient temperature min.:	10°C / 50°F
Ambient temperature max.:	38°C / 101°F

System cooling (n/a: outside limits)			
T ambient	LBP	MBP	HBP
32°C / 90°F	fan 3m/s	n/a	n/a
38°C / 100°F	fan 3m/s	n/a	n/a
43°C / 110°F	n/a	n/a	n/a

Operation pressure range

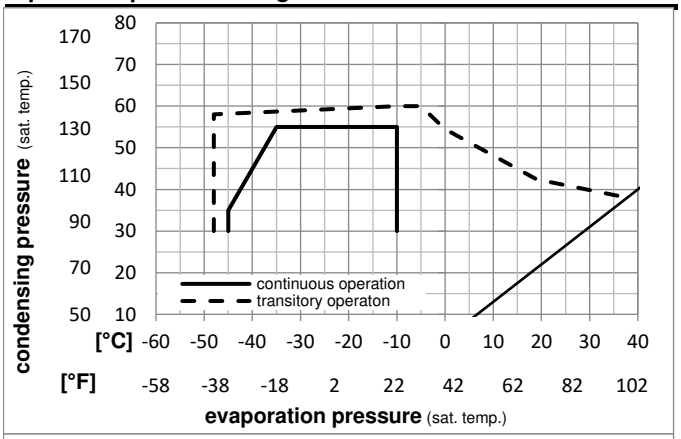

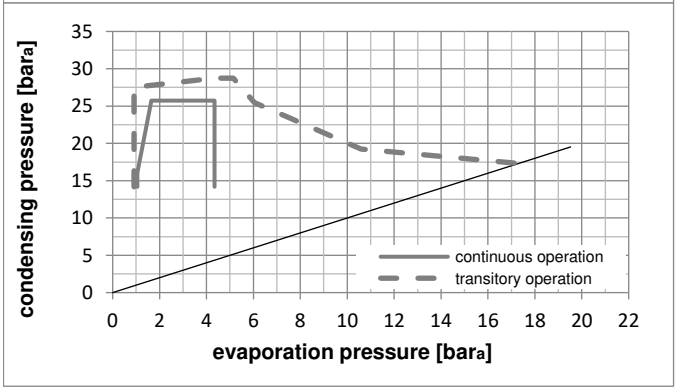

Electrical accessories / wiring diagram

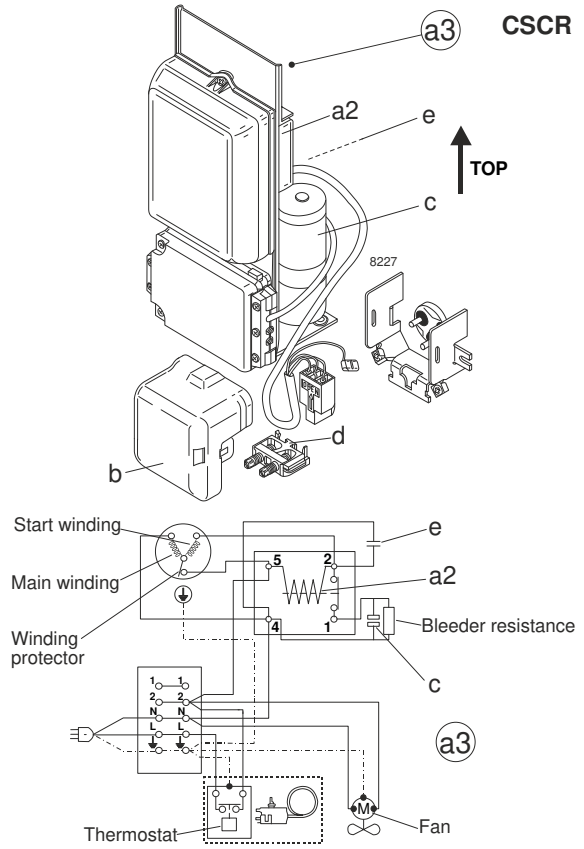

Components

a3	SC starter kit (550mm)	117-7027
b	plastic cover	103N2009
d	cord relief	103N1004

Alternative components

a3	SC starter kit (1000mm)	117-7040
a3	SC starter kit (650mm)	117-7046

Model

Designation **SC21CL** **220-240V/50Hz** **Conf. 2** Sales code: **104L2322**

Optimization + standard conditions 220V/50Hz, CSCR, fan 3m/s, VDE, CCC

	Evaporating pressure (saturation temperature)	Condensing pressure (saturation temperature)	Return gas temp.	Liquid temp.	Cooling capacity			COP	EER		Power consumption P1	Current consumption I	Ref. mass flow ṁ	
	pe	pc	RGT	Tliq	[W]	[Btu/h]	[kcal/h]	[W/W]	[Btu/Wh]	[kcal/Wh]	[W]	[A]	[kg/h]	
[°C]	-23,3	54,4	32,2	32,2	825,0	2818	710,0	1,16	3,95	1,00	713,2	3,77	19,83	**ASHRAE LBP**
[°F]	-10	130	90	90										
[°C]	-25	55	32	55	560,3	1914	482,2	0,82	2,81	0,71	681,6	3,63	17,83	**cecomaf LBP**
[°F]	-13	131	89,6	131										
[°C]	-35	40	20	40	458,8	1567	394,8	0,96	3,27	0,82	479,3	2,71	12,81	**EN12900 LBP**
[°F]	-31	104	68	104										
[°C]	-23,3	48,9	4,44	48,9	636,7	2174	548,0	0,91	3,11	0,78	698,7	3,70	22,89	**ARI540 LBP**
[°F]	-10	120	40	120										
[°C]	-23,3	40,6	32,2	32,2	1004,3	3430	864,3	1,51	5,15	1,30	665,5	3,55	24,14	**AHAM LBP**
[°F]	-10	105	90	90										
[°C]	-35	45	32	45	408,5	1395	351,6	0,84	2,85	0,72	489,2	2,76	11,21	**opt**
[°F]	-31	113	89,6	113										

Performance tables 220V/50Hz, CSCR, fan 3m/s, VDE, CCC

	pe		Cooling capacity			COP	EER		P1	I	m
	[°C]	[°F]	[W]	[Btu/h]	[kcal/h]	[W/W]	[Btu/Wh]	[kcal/Wh]	[W]	[A]	[kg/h]
[°C / °F]	-45	-49	193,8	662	166,8	0,54	1,86	0,47	356,6	2,16	5,29
cond. pressure	-35	-31	408,5	1395	351,6	0,84	2,85	0,72	489,2	2,76	11,21
pc= 45/113	-30	-22	562,3	1920	483,9	0,99	3,38	0,85	568,2	3,11	15,49
return gas temp.	-25	-13	748,5	2556	644,2	1,14	3,91	0,99	653,9	3,50	20,71
RGT= 32/90	-20	-4	968,5	3308	833,5	1,30	4,44	1,12	744,9	3,91	26,93
liquid temp	-15	5	1223,5	4178	1052,9	1,46	4,98	1,25	839,9	4,34	34,23
Tliq= 45/113	-10	14	1514,6	5173	1303,5	1,62	5,52	1,39	937,4	4,78	42,68
[°C / °F]	-45	-49	148,0	505	127,4	0,43	1,45	0,37	347,9	2,12	4,64
cond. pressure	-35	-31	292,0	997	251,3	0,58	1,99	0,50	500,1	2,81	9,21
pc= 55/131	-30	-22	410,0	1400	352,8	0,70	2,38	0,60	587,8	3,20	12,98
return gas temp	-25	-13	560,3	1914	482,2	0,82	2,81	0,71	681,6	3,63	17,83
RGT= 32/90	-20	-4	744,2	2541	640,4	0,95	3,26	0,82	779,9	4,07	23,82
liquid temp	-15	5	962,8	3288	828,6	1,09	3,73	0,94	881,5	4,52	31,03
Tliq= 55/131	-10	14	1217,3	4157	1047,6	1,24	4,22	1,06	984,9	4,99	39,56