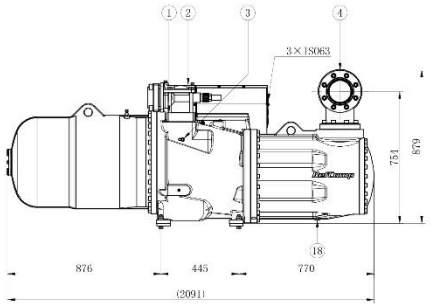

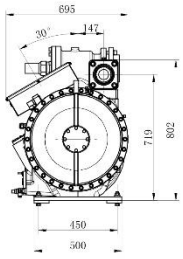

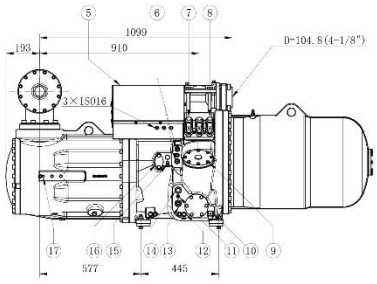

图例

1-止回阀	1-Non return valve
2-排气截止阀	2-Discharge shut-off valve
3-高压接头1/4" SAE-FLARE	3-High pressure gas 1/4" SAE-FLARE
4-吸气截止阀	4-Suction shut-off valve
5-接线盒	5-Electrical box
6-油冷却器接口5/8"SAE-FLARE	6-Oil cooling connection 5/8"SAE-FLARE
7-电磁阀（无级-有级转换）	7-Solenoid valves (step-stepless transform)
8-能调电磁阀	8-Solenoid valves for part-load operation
9-油过滤器	9-Oil filter
10-油加热器	10-Crankase heater
11-温度传感器1/8"NPT	11-oil temperature sensor 1/8"NPT
12-注油/放油阀3/8" SAE-FLARE	12-Oil fill/drain valve 3/8" SAE-FLARE
13-油位开关（选配）	13-Oil level control (optional)
14-油视镜	14-Oil sight glass
15-油压接头1/4" SAE-FLARE	15-Oil pressure 1/4" SAE-FLARE
16-Vi控制电磁阀(选配)	16-Vi adjust solenoid valves (optional)
17-低压接头1/4" SAE-FLARE	17-Low pressure gas 1/4" SAE-FLARE
18-低压侧放油口M14	18-Oil drain motor housing M14
19-喷液接口Ø10/经济器接口Ø42（选配件）	19-Liquid injectionØ10/Eco connectionØ42 (optional)

