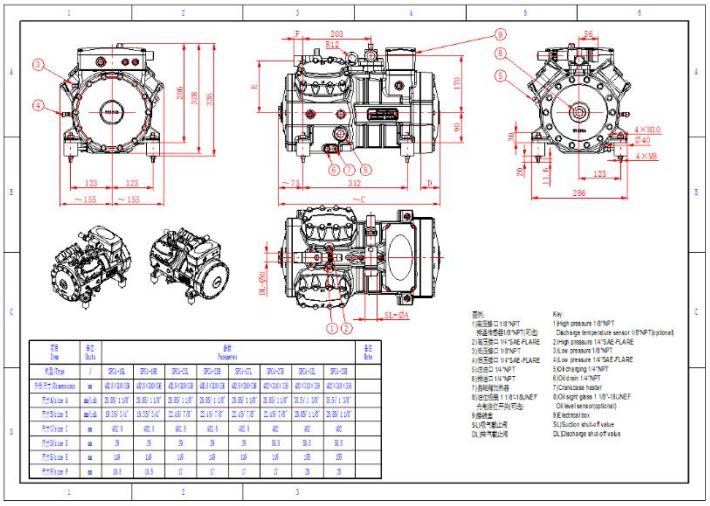

型号 Item	单位 Units	参数 Parameter								备注 Note
机型/Type	/	SF21-10L	SF21-15M	SF21-15L	SF21-23M	SF21-27L	SF21-37M	SF21-45L	SF21-53M	
外形尺寸/Dimensions	mm	482.6×320×324	482.6×320×324	482.6×320×324	482.6×320×324	482.6×320×324	482×320×338	482×320×338	482×320×338	
尺寸A/Size A	mm/inch	35.56/1 1/8"	35.56/1 1/8"	35.56/1 1/8"	35.56/1 1/8"	35.56/1 1/8"	35.56/1 1/8"	35.57/1 3/8"	35.57/1 3/8"	
尺寸B/Size B	mm/inch	28.58/1 1/4"	28.58/1 1/4"	22.45/7 7/8"	22.45/7 7/8"	22.45/7 7/8"	22.45/7 7/8"	28.58/1 1/8"	28.58/1 1/8"	
尺寸C/Size C	mm	482.6	482.6	482.6	482.6	482.6	482	482	482	
尺寸D/Size D	mm	29	29	29	29	29	30.5	30.5	30.5	
尺寸E/Size E	mm	168	168	168	168	168	168	185	185	
尺寸F/Size F	mm	16.5	16.5	17	17	17	17	20	20	

图例:
1)高压接口 1/8"NPT
排温传感器(1/8"NPT)(可选)
2)高压接口 1/4"SAE-FLARE
3)低压接口 1/8"NPT
4)低压接口 1/4"SAE-FLARE
5)吸油口 1/4"NPT
6)排油口 1/4"NPT
7)曲轴箱加热器
8)油视镜(1 1/8"-18UNEF
-有液位开关(可选)
9)接线盒
SL)吸气截止阀
DL)排气截止阀

Key:
1)High pressure 1/8"NPT
Discharge temperature sensor 1/8"NPT(optional)
2)High pressure 1/4"SAE-FLARE
3)Low pressure 1/8"NPT
4)Low pressure 1/4"SAE-FLARE
5)Discharging 1/4"NPT
6)Drain 1/4"NPT
7)Crankcase heater
8)Oil sight glass (1 1/8"-18UNEF
Oil level sensor(optional)
9)Electrical box
SL)Suction shut-off valve
DL)Discharge shut-off valve